Declassified in Part - Sanitized Copy Approved for Release @ 50-Yr 2014/05/14 : CIA-RDP81-01043R004600130010-2

50X1-HUM

INFORMATION REPORT INFORMATION REPORT

CENTRAL INTELLIGENCE AGENCY

This material contains information affecting the National Defense of the United States within the meaning of the Espionage Laws, Title 18, U.S.C. Secs. 793 and 794, the transmission or revelation of which in any manner to an unauthorized person is prohibited by law.

50X1-HUM

S-E-C-R-E-T

COUNTRY	USSR	**REPORT**	
SUBJECT	Soviet Technical Manuals Dealing with Helicopter Routine, Radio Compass and To-From Indicator, and AN-2 Spare Parts and Instruments	**DATE DISTR.**	22 June 1960
		NO. PAGES	1
		REFERENCES	**RD**
DATE OF INFO.			
PLACE & DATE ACQ			

50X1-HUM

SOURCE EVALUATIONS ARE DEFINITIVE. APPRAISAL OF CONTENT IS TENTATIVE.

Russian-and English-language manuals

50X1-HUM

Att. No. 1 Perechni Odinochnogo Komplekta Zapasnykh Chastey Nazemnogo Ekspluatatsionnogo Oborudovaniya Bortovogo Instrumenta k Samoletu AN-2 (Lists of a Complete Set of Spare Parts of the Ground Operating Equipment and the Airborne Instruments of the AN-2 Aircraft). This manual consists of 20 pages of parts listings. It is in the Russian language.

Att. No. 2 Helicopter Routine - Maintenance Instructions No. 1-B. This is a Soviet instruction manual written in English. It consists of 44 pages of operating and maintenance instructions for helicopters.

Att. No. 3 Radio Compass and To-From Indicator Type RPKO-IOM. This manual presents a brief description of the radio compass and the RPKO-IOM To-From Indicator and includes operating instructions. The manual is in English and consists of 87 pages.

50X1-HUM

Distribution of Attachments:

50X1-HUM

Air: Retention (Photocopies of Atts. Nos. 1-3)

50X1-HUM

S-E-C-R-E-T

50X1-HUM

STATE	X	ARMY	X	NAVY	X	AIR /EV	X	NSA	X	FBI		NIC	X		

(Note: Washington distribution indicated by "X"; Field distribution by "#".)

INFORMATION REPORT INFORMATION REPORT

Declassified in Part - Sanitized Copy Approved for Release @ 50-Yr 2014/05/14 : CIA-RDP81-01043R004600130010-2

Declassified in Part - Sanitized Copy Approved for Release @ 50-Yr 2014/05/14 : CIA-RDP81-01043R004600130010-2

Appendix 3

LUBRICATION CHART
FOR
HELICOPTER CONTROL SYSTEM, HYDRAULIC SYSTEM AND LANDING GEAR

Item No.	Parts to be lubricated	Frequency	Kind of lubricant	Notes
1	Open and hinged bearings of the engine and stabilizer control rods and of the hydraulic booster system	After 50±5 hours	ЦИАТИМ-201	Change lubricant
2	Closed-type bearings of helicopter control system, engine controls, lifting airscrew setting automat and catch of centrifugal overhang limiter	After 50±5 hours	ЦИАТИМ-201	Renew the anti-corrision lubricant of the protective washers that are accessible.
3	Tank of hydraulic mixture	Every year	АМГ-10	Change lubricant; clean filter.
4	Landing gear hinge joints	Every year	ЦИАТИМ-201	Change lubricant
5	Landing gear shock absorber	Every year	АМ-70/10	Change mixture.

Declassified in Part - Sanitized Copy Approved for Release @ 50-Yr 2014/05/14 : CIA-RDP81-01043R004600130010-2

Declassified in Part - Sanitized Copy Approved for Release @ 50-Yr 2014/05/14 : CIA-RDP81-01043R004600130010-2

2	3	4	5	6
Filter, oil tank	1	MK-22 MC-20 oil*	84 litres	Check oil level before every flight; after every 50 hours drain 1.5-2 litres of oil and check it; after every 10 hours change the oil.
Magnetic cam	2	Turbine oil "Л"	5-8 drops into a lubricator	Lubricate after every 100 hours.
Oil separator	2	AMг -10	-	Add if and when necessary.
MФC-19 oil filter	1	-	-	Inspect at regular intervals and wash.
MФC-19-1 oil filter	1	-	-	Inspect at regular intervals and wash.
Oil system main reductor	1	MK-22 or MC-20 oil**	40 litres	Check the oil level before every flight, after every 50 hours drain 1-2 litres of oil and check it; after every 100 hours change the oil.
Oil filter main reductor	1	-	-	Inspect and wash: after the first trial, after the first 5 hours of operation and after every 50 hours.
Magnetic plug	1	-	-	Inspect and wash (on helicopters of the first models the plugs cannot be removed).
HB-82B oil filter	1	-	-	Inspect and wash after every 50 hours.
FC-24M oil filter	1	-	-	
PПД oil filter	1	-	-	

* In winter fill with liquefied oil.

** In winter fill with liquefied oil.

Declassified in Part - Sanitized Copy Approved for Release @ 50-Yr 2014/05/14 : CIA-RDP81-01043R004600130010-2

Declassified in Part - Sanitized Copy Approved for Release @ 50-Yr 2014/05/14 : CIA-RDP81-01043R004600130010-2

2	3	4	5	6
5 Axial hinge, lifting air-screw hub	4	MC-20(in summer) MC-14(in winter)	7.2 litr.	Add lubricant through a funnel with a strainer. Lubricant is to be added when the distance sleeve becomes exposed; after every 100 hours the lubricant should be changed.
6 Hinge joint, blade lever	4	ЦИАТИМ -203	-	Force lubricant until it appears under the protective washers of the bearings.
7 Vertical hinge joints, lifting air-screw hub	4	Special hypoid lubricant	-	Force lubricant by means of a rod grease gun until excessive lubricant appears through the valve.
8 Pin of centrifugal, limit-er, lifting airscrew hub	4	ЦИАТИМ -203	-	Force lubricant until it appears under the packing glands.
9 Hinge joint of disc lever, lifting airscrew setting automat	4	ЦИАТИМ -203	-	Force lubricant until it appears under the bearing protecting washers.
10 Ball joint of disc guide, lifting air-screw setting automat	1	ЦИАТИМ -203	-	Force lubricant until it appears under rubber cover.
11 Bearing of disc, lifting airscrew setting automat	1	ЦИАТИМ -203		Lubricate after every 50 hours with removal of current-carrying commutator casing.
12 Bearing, general pitch lever	2	ЦИАТИМ -203	-	Force lubricant till it appears under the rubber rings on the lever (bracket) inner side.
13 Bearing of bracket, general pitch lever	2	ЦИАТИМ-203	-	
14 Slits of upper clutch main shaft	1	OT (ЖЕ-50)	-	Lubricate liberally during assembly.

Declassified in Part - Sanitized Copy Approved for Release @ 50-Yr 2014/05/14 : CIA-RDP81-01043R004600130010-2

Declassified in Part - Sanitized Copy Approved for Release @ 50-Yr 2014/05/14 : CIA-RDP81-01043R004600130010-2

1	2	3	4	5	6
8	Tail shaft hinge joints	8	Special hypoid lubricant	0.08 litre	Force lubricant by means of a rod grease gun until excessive lubricant appears through the valve.
9	Intermediate reductor case	1	Special hypoid lubricant	1 litres	Check the level of lubricant after every flight; change the lubricant after every 100 hours.
10	Slide bushing lifting air-screw setting automat	1	ЦИАТИМ-203	-	Force lubricant until it appears under the slide. In case slide travels with difficulty, remove excessive lubricant through lubricator.
11	Bearings of disc rods, lifting air-screw setting automat	4	ЦИАТИМ-203		Force lubricant by means of a grease gun until it appears under the rubber covers.
12	Horizontal hinge joint, lifting air-screw hub	4	Special hypoid lubricant		Add lubricant through a funnel with a strainer. Lubricant is to be added when its level drops by more than 30 mm below the edge of the filling opening.
13	Packing glands, de-icer distributor supply pipe	1	ЦИАТИМ-203		With distributor cover removed force lubricant until it appears through the check hole on the other side of the body or under the packing glands *.
14	Bearing, de-icer distributor supply pipe	1	ЦИАТИМ-203		Remove de-icing signalling device and cap put lubricant into bearing.

* Remove excessive lubricant from the body of the de-icer distributor.

Declassified in Part - Sanitized Copy Approved for Release @ 50-Yr 2014/05/14 : CIA-RDP81-01043R004600130010-2

Declassified in Part - Sanitized Copy Approved for Release @ 50-Yr 2014/05/14 : CIA-RDP81-01043R004600130010-2

Appendix 2

LUBRICATION CHART

FOR

ENGINE, TRANSMISSION ASSEMBLIES, AIRSCREW HUBS AND LIFTING AIRSCREW SETTING AUTOMAT

Item N°	Parts to be filled or lubricated	Number of points	Kind of oil (grease) for summer and winter service	Amount or capacity	Notes
1	2	3	4	5	6
1	Axial hinge joint, tail airscrew blade	3	ЦИАТИМ-201	-	Force lubricant with a rod grease gun until excessive lubricant appears through the valve.
2	Universal joint, tail airscrew blade	3	ЦИАТИМ-201	-	
3	Horizontal hinge joint, tail airscrew	6	Special hypoid lubricant	-	Force lubricant with a rod grease gun until excessive lubricant appears through the valve.
4	Rod double-row ball bearing	1	ЦИАТИМ-201	-	Remove guide nut and feed lubricant into bearing and nut recess.
5	Bearings, guide rods	1	ЦИАТИМ-201	0.4 kg	Remove cover and fill airscrew body with lubricant distributing it uniformly in each corner of the body.
6	Tail reductor case	1	Special hypoid lubricant	1.4 litres	Check the level of lubricant after every flight; change the lubricant after every 100 hours.
7	Tail shaft splite	2	ЦТ(НК-50)	-	Lubricate liberally during assembly.

Declassified in Part - Sanitized Copy Approved for Release @ 50-Yr 2014/05/14 : CIA-RDP81-01043R004600130010-2

Frequency	No. of point to be lubricated (see Fig.)																																					
	1	2	3	4	5	6	7	8	9	10	11	12	13	14	15	16	17	18	19	20	21	22	23	24	25	26	27	28	29	30	31	32	33	34	35			
Before every flight																																						
During after-flight inspection																																						
After 25±5 hours																																						
After 50±5 hours																					(1)																	
After 100±5 hours																																						
During installation on helicopter																					(2)																	

Note: 1. Lubricate prior to beginning routine maintenance of the current-carrying commutator; while lubricating the bearing of the ring of the lifting airscrew setting automat the ring should be periodically turned through 45-60°.

2. Lubricate prior to installing the current-carrying commutator.

Declassified in Part - Sanitized Copy Approved for Release @ 50-Yr 2014/05/14 : CIA-RDP81-01043R004600130010-2

Appendix 1

LUBRICATION DIAGRAM

FOR ENGINE, TRANSMISSION ASSEMBLIES, AIRSCREW HUBS AND LIFTING AIRSCREW SETTING AUTOMAT

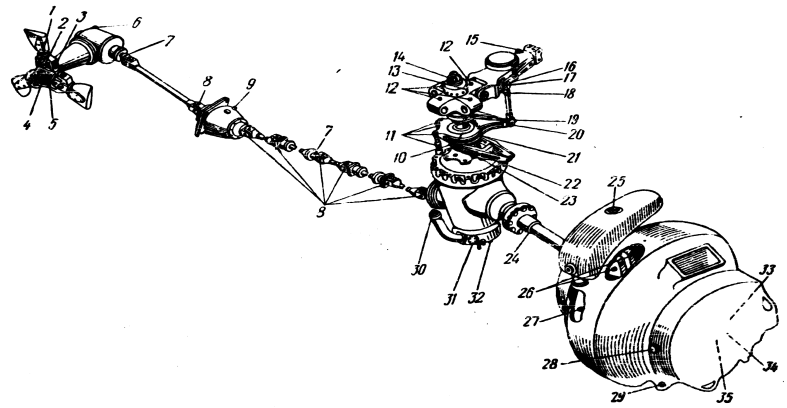

Declassified in Part - Sanitized Copy Approved for Release @ 50-Yr 2014/05/14 : CIA-RDP81-01043R004600130010-2

Declassified in Part - Sanitized Copy Approved for Release @ 50-Yr 2014/05/14 : CIA-RDP81-01043R004600130010-2

2. After Every 30±5 Days of Parking

1. Carry out the operations indicated in section "After Every 10 Days of Parking".
2. Switch on the radio equipment and radio navigation aids for 10-15 minutes to dry them under current.
3. When preparing the helicopter for flying duties after 30 days of parking it is necessary to carry out the operations indicated in section "After-Flight Inspection".

3. After Every 3 Months ± 10 Days of Parking

1. Carry out the operations indicated in section "After Every 30±5 Days of Parking".
2. Carry out the operations indicated for the armament maintenance "After Every 25±5 Flying Hours".
3. When preparing the helicopter for a flying mission after it has been parked for more than 3 months it is necessary to fly-in the helicopter for 30 minutes.

4. After Every 6 Months ±15 Days of Parking

1. Carry out the operation indicated for helicopter maintenance "After Every 3 Months ±10 Days of Parking".
2. Prior to flying-in the helicopter carry out the operations indicated for the hydraulic system maintenance "After Every 25±5 Flying Hours".

Declassified in Part - Sanitized Copy Approved for Release @ 50-Yr 2014/05/14 : CIA-RDP81-01043R004600130010-2

Declassified in Part - Sanitized Copy Approved for Release @ 50-Yr 2014/05/14 : CIA-RDP81-01043R004600130010-2

III. Routine Maintenance During Helicopter Storage Period

1. If for some reasons the helicopter is suspended from flying duties for a period exceeding 10 days, the helicopter, engine and armament should be slushed in compliance with the "Operating and Maintenance Instructions".
2. If for some reasons the helicopter does not fly, but it is not suspended from flying duties, it is necessary to perform the following scheduled routine maintenance operation:
   1) after every 10 days of parking;
   2) after every 30±5 days of parking;
   3) after every 3 months ±10 days of parking;
   4) after every 6 months ±15 days of parking.

1. After Every 10 Days of Parking

1. Carry out the operation indicated in section "After Flight Inspection".
2. Run the engine with the transmission and hydraulic system engaged and check the operation of the hydraulic boosters with the pump engaged by actuating the general pitch handle, pedals and lever.
3. Check the helicopter and engine parts for corrosion.
4. Check the rubberized joints and flexible hoses of the oil, gasoline and de-icing systems for leakage.
5. Lubricate the rods of the shock-absorbing struts and tail support anew.
6. Clean the helicopter and engine from dust and dirt.
7. Clean the armament.
8. In summer, after rainy weather, remove the canvas cover from the helicopter, open all the external hatches and hoods of the helicopter and engine (for airing)dry the canvas covers.

Declassified in Part - Sanitized Copy Approved for Release @ 50-Yr 2014/05/14 : CIA-RDP81-01043R004600130010-2

Declassified in Part - Sanitized Copy Approved for Release @ 50-Yr 2014/05/14 : CIA-RDP81-01043R004600130010-2

36. Inspect and wash (wipe) with rectified alcohol;

a) the contacts of all the relays installed in the radio equipment blocks;

b) the contacts of the sliders of the potentiometers and variometer carriages.

37. Check on testing stands the main specifications of the radio equipment;

38. Check whether the filament of electric detonator TAT-8 is not damaged.

39. Open the covers of the filters-convertors; check the condition of the wiring, parts, insulation of wires and also the condition of the plug connectors.

40. Inspect the ball bearings of the radio equipment electric motors; change or add lubricant if necessary.

41. Check whether the main performance data of the convertors correspond to the specified data.

Armament

42. Zero the armament by firing.

Note: Zeroing of armament should also be carried out after replacement of the sight or armament securing units.

43. Check the ball joints of the rod and control panel for backlashes.

5. After Every 150 ± 5 Flying Hours

1. Carry out all the operations indicated in section "After Every 50±5 Flying Hours".

2. Replace the longitudinal and lateral disc control rods of the lifting airscrew setting automat.

Declassified in Part - Sanitized Copy Approved for Release @ 50-Yr 2014/05/14 : CIA-RDP81-01043R004600130010-2

Declassified in Part - Sanitized Copy Approved for Release @ 50-Yr 2014/05/14 : CIA-RDP81-01043R004600130010-2

25. Open the helicopter plug connectors, inspect them and remove the oxide.

26. Open the relay covers, inspect them and clean the contacts with a cloth wetted in Б-70 gasoline.

27. Open the ЦРУ device, check the condition of the wiring, inspect the time-lag and high-melting fuses.

28. Inspect the storage battery container; restore its painting and felt heating-insulance, if necessary.

Instruments

29. Check the gasoline gauge for correct readings and the signalling lamp for correct adjustment; to do this, it is necessary to drain the gasoline from the gasoline tank.

30. Remove the pressure and vacuum gauge and check it for correct readings. Blow through the pipe line running from the engine to the pressure and vacuum gauge and check it for air-tightness.

31. Inspect and restore, if necessary, the distinctive marks on the static and full pressure rubberized hoses of the Pitot tube system.

32. Open all the connectors of the electric instruments and check their condition.

33. Wipe the pins with a cloth wetted in Б-70 gasoline.

Radio Equipment

34. Remove the APK-5 elastic shafts, wash them, inspect the casing and parts, lubricate them.

35. Remove the radio equipment from the helicopter and check the condition of the wiring, the fastening of the radio set parts and tubes inside the blocks.

Declassified in Part - Sanitized Copy Approved for Release @ 50-Yr 2014/05/14 : CIA-RDP81-01043R004600130010-2

Declassified in Part - Sanitized Copy Approved for Release @ 50-Yr 2014/05/14 : CIA-RDP81-01043R004600130010-2

14. Check the tightening of the stud nuts of the gasoline tank suspension and of the container securing bolts.

15. Overhaul the wheels. Change their lubricant.

Engine

16. Change the oil in the engine oil system. Inspect the magnetic plug of the front oil pump.

17. Check the gaps between the valve rods and the lever rollers in all the cylinders.

18. Inspect all the spark plugs and see whether there is any mechanical damage; clean them from carbon deposit; measure the gap between the electrodes; check the spark plugs for spark formation and air-tightness.

19. Check the magneto.

20. Check the tightening of all the clamps of the engine rubberized connection pieces. Check also the tightening of the nuts securing the inlet pipes on the booster front body.

Electric Equipment

21. Remove the ДМР-400 relay from the helicopter and carry out:

a) a general check and inspection;

b) a check of the РПР-20 relay and contactor;

c) a check of the reverse current value at which the ДМР-400 relay switches off.

22. Check the adjustment of the voltage regulator with the engine running at maximum and minimum speed.

23. Remove the lamp-headlight, inspect the contact section, determine the extent of wear of the electric motor brushes and check whether the brush springs are in good repair.

24. Blow the electric mechanism. Adjust the direction of the light beam.

Declassified in Part - Sanitized Copy Approved for Release @ 50-Yr 2014/05/14 : CIA-RDP81-01043R004600130010-2

Declassified in Part - Sanitized Copy Approved for Release @ 50-Yr 2014/05/14 : CIA-RDP81-01043R004600130010-2

42. Check all the tubes, installed in the radio equipment sets.

Armament

43. Check the zeroing of the armament.

4. After Every 100 ± 5 Flying Hours

1. Carry out all the operations indicated in Section "After Every 50±5 Flying Hours".

   In addition, perform the following operations:

Helicopter

2. Change the oil in the reductors.
3. Inspect the magnetic plug of the main reductor.
4. With the hydraulic system shut off check the backlashes of the hydraulic booster slide valves.
5. Inspect the surface of the return rod of the longitudinal hydraulic booster in the guide rollers section.
6. Restore the coating of liquid glass on the pipe thermo-insulation in the engine compartment, if necessary.
7. Change the oil in the axial hinges of the lifting airscrew hub.
8. Check the fastening of the nuts and bolts securing the main and tail shafts, the tail airscrew and the levers of the lifting airscrew blades.
9. Check the adjustment of the brake shoes and their control wire ropes.
10. Check the operation of the mechanisms for jettisoning the pilot's cabin doors and the gunner's cockpit hatch-cover.
11. Check the nuts of the intermediate and tail reductor flange connections for proper tightening.
12. Lubricate the bearings and packing gland of the vertical pipe of the de-icer distributor.
13. Check the nuts securing the assemblies to the main reductor for proper tightening.

Declassified in Part - Sanitized Copy Approved for Release @ 50-Yr 2014/05/14 : CIA-RDP81-01043R004600130010-2

Declassified in Part - Sanitized Copy Approved for Release @ 50-Yr 2014/05/14 : CIA-RDP81-01043R004600130010-2

check also the air-tightness of the outlet valve.

31. Check the clock for precise movement.

Radio Equipment

32. Check by means of measuring instruments the basic specifications of the radio equipment without removing it from the helicopter whenever possible.

33. Measure the electric interference to radio reception with the engines running and the power consumers engaged.

34. Open the casing of the APK-5 frame, clean the contact rings, check the installation and contacts of ДPK-627 electric motor; check also the glass panes and the air-tightness of the APK-5 frame bath, the spare gaskets and the vinyl-chloride coating of the plugs. Lubricate the gear wheels of the frame turning mechanism and radial ball bearing.

35. Remove the covertors, check the condition of the commutator, the height of the brushes, the proper condition of the brush springs; measure the pressure of the brush springs; blow the convertors with compressed air.

36. Check the jumpers of the assemblies and connecting cables for proper fastening.

37. Inspect the plug connectors and clean them when necessary.

38. Inspect the TAT detonator N°8.

39. Check the telephones and throat-microphones to see whether they meet the requirements of the Specifications.

40. Remove the antennae of the radio-altimeter and check the contactor surfaces of the antennae base plate and the helicopter covering. After the antennae have been installed coat the edges of their base plates with paint.

41. Inspect the contacts of the pulsating motor and the contacts of the remote control push-button mechanisms; check whether the crystals are in good condition.

Declassified in Part - Sanitized Copy Approved for Release @ 50-Yr 2014/05/14 : CIA-RDP81-01043R004600130010-2

Declassified in Part - Sanitized Copy Approved for Release @ 50-Yr 2014/05/14 : CIA-RDP81-01043R004600130010-2

Instruments and Oxygen Equipment

24. Remove the speed indicator, altimeter and variometer from the helicopter; check whether their readings correspond to the rated; check the air tightness of the instrument body, the main error, variation; check the pointers for smooth travel; renew the correction Tables for the speed indicator and altimeter.

25. Open the sumps of the Pitot static tube system; eliminate moisture, blow the static and dynamic pipe lines with compressed air.

26. Check the ДГМК-3 and КИ-11 compasses pointers for lack of sensitivity and for steadying time. Test the ДГМК-3 compass on a testing device to see whether its readings correspond to the Specifications. Check it also for the setting error. Check the ДГМК-3 compass for matching rate and also for the insulance value arising between the plus connector pins in the transmitter and gyro-assembly.

27. Remove the ПАГ-1ФН convertor, inspect the commutator and brushes, measure the a.c. voltage and the consumed d.c. intensity.

28. Remove the АГК-47Б gyrohorizon from the helicopter and check it on a testing apparatus to see whether its readings correspond to the specified.

29. Change the hydraulic mixture in the pipe lines and flexible hoses delivering oil to the receivers of the electric pressure gauges.

30. Check the oxygen apparatus and the portable devices on the КУ-4 testing equipment; check the apparatus resistance to inspiration, the air-tightness of the economizer valve, the adjusted pressure of the reducer, the amount of emergency oxygen delivered by the oxygen reducer. Check the resistance of the oxygen mask to inspiration and expiration;

Declassified in Part - Sanitized Copy Approved for Release @ 50-Yr 2014/05/14 : CIA-RDP81-01043R004600130010-2

Declassified in Part - Sanitized Copy Approved for Release @ 50-Yr 2014/05/14 : CIA-RDP81-01043R004600130010-2

Electric Equipment

12. Tear the protective bands off the electric motors; check the commutators and brushes; blow the electric motor with compressed air. Check the time necessary for the electric mechanisms to operate and the current consumed by them. Remove the branch pipe for blowing the generator and clean its inner section from oil and dirt.
13. Open the starting vibrator and relay, check the condition of the contacts; when necessary - adjust the clearance.
14. Measure the current consumed by the vibrator.
15. Open the contacts of the contactors and inspect them. Make sure that the armature does not jam and that the electromechanical elements are in good repair.
16. Measure the current consumed by the solenoids.
17. Inspect the connection of the metal screen bridges of the assemblies and connecting cables.
18. Check the electric contact of the minus wires with the helicopter frame.
19. Check the insulation of the electric mains open sections and their fastening to the helicopter sideboard.
20. Together with the helicopter mechanic check the adjustment of the terminal switches, installed separately from the electric mechanisms.
21. Open the fairings of the helicopter lights; check the connection of the electric wires.
22. Check the condition of the commutator and feed lubricant into the bearings of the МГ-1М mechanism.
23. Check the electric circuits and signalling lamps of the fire warning system and the circuits of the fire fighting equipment control.

Clean the current-carrying commutator.

Declassified in Part - Sanitized Copy Approved for Release @ 50-Yr 2014/05/14 : CIA-RDP81-01043R004600130010-2

Declassified in Part - Sanitized Copy Approved for Release @ 50-Yr 2014/05/14 : CIA-RDP81-01043R004600130010-2

3. After Every 50 ± 5 Flying Hours

1. Carry out the operations indicated in section "After Every 25 ± 5 Flying Hours".

   In addition, carry out the following operations:

Helicopter

2. Check the cleanliness of the oil in the P-5 reductor, inspect and wash the oil pump pressure stage screen filter.
3. Inspect the fire fighting equipment and the neutral gas system.
4. Check the bolts securing the blade setting levers as well as the bolts securing the damper of the lifting airscrew hub for proper tightening.
5. Remove and wash the engine air suction dust filter.
6. Lubricate the units and assemblies of the helicopter in accordance with the Lubrication Chart.
7. Remove, wash and inspect the filters of the gasoline system and of HB-82B pump.
8. Check the throttle valve for complete opening and closing.
9. Check the main shaft for proper installation (for true running).

Engine

10. With the engine still warm drain the oil from the oil sump through a funnel with a N°24 screen and check the cleanliness of the latter; check also whether there are any metal chips in the oil.
11. Inspect and wash the MФC-19, MФC-19-1, PПR and HB-82A filters check whether there are any resinous deposits or metal chips on their screens.

Declassified in Part - Sanitized Copy Approved for Release @ 50-Yr 2014/05/14 : CIA-RDP81-01043R004600130010-2

Declassified in Part - Sanitized Copy Approved for Release @ 50-Yr 2014/05/14 : CIA-RDP81-01043R004600130010-2

Radio Equipment

34. By means of an indicator check the PB-2 transmitter radiation power.
35. Check the circuit of electric detonator N°8 TAT.
36. Check the condition of the antennae, shock-absorbing springs, down-leads and their lead-in terminals and the plug connectors of the high-frequency feeders.
37. Check the rubberized hose of the dehydrator; and dry the silica-gel, if necessary.
38. Check the radio equipment blocks for proper shock-absorption.
39. Check the connection of the wires in the split block of the intercommunication system and the condition of the wiring on the control handles.
40. Check the cables for proper fastening to the helicopter sideboard, check their shielding as well as the fixing of the radio equipment jumpers.
41. Check the operation of the selector switches, relays, push-buttons, regulators and stoppers; check the connection of the plugs and the plug connectors.
42. Measure the a.c. voltage of the convertors; check the radio equipment for proper operation without removing it from the helicopter.

Armament

43. Check the mounting power units by means of a magnifying glass.
44. Inspect the parts make of magnesium alloy and recondition their protective painting if necessary.

Declassified in Part - Sanitized Copy Approved for Release @ 50-Yr 2014/05/14 : CIA-RDP81-01043R004600130010-2

Declassified in Part - Sanitized Copy Approved for Release @ 50-Yr 2014/05/14 : CIA-RDP81-01043R004600130010-2

31. Check the air-tightness and fastening of the gasoline gauge transmitter.

32. With the engines running check the pointers of the air-power plant instruments for smooth travelling and correct readings.

33. Inspect the oxygen equipment; check the pipe lines for proper security and fastening to the helicopter sideboard; see to it that there are no oil traces on the apparatus. Check the quality of the oxygen by smell. Check also:

a) the amount of emergency delivery of oxygen from the oxygen apparatus;

b) the resistance to inspiration;

c) the air-tightness of the low-pressure chambers, oxygen economizer and high-pressure system;

d) the adjusted pressure of the oxygen pressure reducer;

e) the condition of the oxygen hoses; whether they have any dents, frayed places or cracks; check the fastening of the hoses, the condition of the rubber gaskets in the pipe unions for receiving the oxygen hoses and instruments;

f) the condition of the oxygen pipe lines; see whether they have any dents, frayed places or sharp bends; check the fastening of the pipe lines to the helicopter sideboard; check the nipples for reliable soldering to the pipe lines and make sure by means of a wrench that the union nuts are properly tightened;

g) the air-tightness of the oxygen valves.

Declassified in Part - Sanitized Copy Approved for Release @ 50-Yr 2014/05/14 : CIA-RDP81-01043R004600130010-2

Declassified in Part - Sanitized Copy Approved for Release @ 50-Yr 2014/05/14 : CIA-RDP81-01043R004600130010-2

22. Check the main reductor current-collecting commutator and the fastening of the electric wires to the brushes. Check the helicopter light fairings and the resistance in their circuits.

23. Open the electric panels and inspect the automatic protective devices and the fuses; check the electric mains protecting automatic devices for proper operation of their mechanical element and the electric wire screws for proper tightening.

24. Check the fastening of the mechanisms of the electric pumps of the de-icing and gasoline systems.

25. Check the connection of the minus wires of the electric sets and lighting equipment fittings.

Instruments and Oxygen Equipment

26. Inspect the instrument board.

27. Check the shock-absorption of the instrument board, the fastening of its hinged part and the condition of the wiring behind the board.

28. Disconnect the rubberized hoses of the full and static pressures from the instrument pipe unions and from the Pitot tube. Inspect the hoses and blow them with compressed air.

29. By means of type КПУ-3 testing apparatus check the instruments for proper connection, for correct readings and proper air-tightness of the static and full air pressure pipe lines; check whether the instrument readings correspond to the specified data.

30. Inspect the remote gyromagnetic compass and check:

a) the compass for reading errors and the indicating instrument for pointer deflection when matched;

b) the compass matching rate;

c) the magnetic transmitter for precise setting.

Declassified in Part - Sanitized Copy Approved for Release @ 50-Yr 2014/05/14 : CIA-RDP81-01043R004600130010-2

Declassified in Part - Sanitized Copy Approved for Release @ 50-Yr 2014/05/14 : CIA-RDP81-01043R004600130010-2

11. Lubricate the helicopter units according to the Lubrication Chart.
12. Wash the gasoline sump filter on the gasoline panel.
13. In winter time check the contents of the gasoline in the oil of the main reductor system and the air-tightness of the electromagnet system of the ЗКР-3 oil thinning cock.
14. In summer remove and clean the engine air suction dust filter.

Electric Equipment

15. Tear the protecting bands off the generator and electric starter and check the condition of the commutator; see whether the brushes and brush current-carrying wires are in good repair; check also the fastening of the brush springs.
16. Blow the generator inside and the commutator with compressed air.
17. Clean the contact pins and sockets of the storage battery terminals as well as the airfield supply sockets from oxide. Clean the storage battery container heat-insulating layer from corrosion and dry it.
18. Check the plug connectors on the partition between frames N°1 and N°2 for proper connection.
19. Open the box covers of the commutation and power relays in the load cabin. Check the fastening of sets and instruments located there.
20. Check the operation of the ГСР generator, ДМР-400 differential magnetic relay and Р-25А regulator at minimum and maximum engine speed.
21. Check the terminal switches and their wiring for proper fastening. Wipe them. Check their operation.

Declassified in Part - Sanitized Copy Approved for Release @ 50-Yr 2014/05/14 : CIA-RDP81-01043R004600130010-2

Declassified in Part - Sanitized Copy Approved for Release @ 50-Yr 2014/05/14 : CIA-RDP81-01043R004600130010-2

2. After Every 25 ± 5 Flying Hours

1. Inspect the helicopter, its armament and electric equipment as indicated in the scope of after-flight inspection.

   In addition, carry out the following operations

   Helicopter

2. Check the fuselage inside units: the fastening of the fittings to the longerons; the fastening of the flange joints between the tail girder and the fuselage and end girder; check also the condition of the fuselage drainage system.
3. Inspect the tail girder frames, see whether there are any cracks on them, pay special attention to frames Nos 5,9,13 and 17 mounting the tail shaft supports.
4. Inspect the helicopter and engine controls.

   By means of a magnifying glass inspect the exhaust manifold. Check the clearance in the ball-and-socket joint of the disc guide of the lifting airscrew setting automat.
5. Inspect the MП-100л loading mechanisms and check their operation.
6. Check the condition of the textolite block guiding the tail airscrew control wire ropes.
7. Inspect the tail airscrew control wire ropes and check their tension.
8. Check the air pressure in both hydraulic accumulators.
9. Remove, inspect and wash in pure gasoline without ethyl addition the filters of the hydraulic system and the strainers installed in the pipe unions of the fluid delivering automatic valve.
10. Check the operation of the main and doubling hydraulic systems from the ground hydraulic carriage.

Declassified in Part - Sanitized Copy Approved for Release @ 50-Yr 2014/05/14 : CIA-RDP81-01043R004600130010-2

Declassified in Part - Sanitized Copy Approved for Release @ 50-Yr 2014/05/14 : CIA-RDP81-01043R004600130010-2

4. Check the condition of the ball bearings. Remove the brushes and see whether the armature turns easily in the ball bearings.

The armature must turn freely, smoothly and without jamming.

If the armature turns with difficulty or jams, disassemble the generator and examine the ball bearings.

Replace faulty ball bearings.

VII. Disassembly and Assembly

Disassembly

During the period of operation the generator may be disassembled only when absolutely necessary.

The repairshop premises must be clean, dry and light, equipped with a bench, covered with linoleum, textolite or laminated insulation.

Do not use the bench for fitter's jobs (cutting, filing) in order not to contaminate the generator units with metal particles.

Disassemble the generator in the following order:

1. Unscrew the bolts clamping strap (9) with a box spanner or screw driver, remove the strap and raise the brushes.

2. Remove locking wire, turn off the screws fastening the hood and remove hood (2).

3. Unlock the nut fastening the fan and remove the nut and the fan.

4. Remove flexible shaft (12) by lightly knocking its end with a wooden hammer.

5. Turn off the screws fastening flange (15).

6. Insert the jack flexible shaft into the armature and tighten it with a nut.

Declassified in Part - Sanitized Copy Approved for Release @ 50-Yr 2014/05/14 : CIA-RDP81-01043R004600130010-2

Declassified in Part - Sanitized Copy Approved for Release @ 50-Yr 2014/05/14 : CIA-RDP81-01043R004600130010-2

SECTION TWO

ROUTINE MAINTENANCE

The routine maintenance is scheduled in accordance with the number of the helicopter flying hours. The operation of the engine, lifting airscrew and its hub, reductors and transmission when on ground is counted for 20 per cent of that when in flight.

I. After First Trial of Engine

1. Check the fastening of the engine to the frame and of the frame to the helicopter.
2. Check the fastening of the exhaust branch pipes and see whether there is any gas blow-out through the joints.
3. Check the fastening of parts and assemblies mounted on the engine frame and the engine.
4. Check all the joints of the fuel and oil systems.
5. Check the fastening of the gasoline pipe line, oil pipe line, high pressure pipes and electric wiring; all these parts should not contact with the engine and helicopter parts.
6. Check the throttle valve for complete opening and closing.
7. Check the fastening of the spark plug elbows and the ignition wiring.
8. Check the main shaft for true running.
9. Check the condition of the filters of the fuel system and the HB-82B pump.
10. With the engine still warm drain the oil from the engine oil sump through a funnel with a N°24 screen (576 cells per one sq.cm.) and check the cleanliness of the screen.
11. Inspect and wash the MФ C-19, MФC-19-1, PПД and HB-82B filters.

Declassified in Part - Sanitized Copy Approved for Release @ 50-Yr 2014/05/14 : CIA-RDP81-01043R004600130010-2

Declassified in Part - Sanitized Copy Approved for Release @ 50-Yr 2014/05/14 : CIA-RDP81-01043R004600130010-2

95. Install the weapons and check their operation.

96. In case the ammunition has not been completely expended, inspect the remaining cartridges, clean and lubricate them, if necessary. Replenish the ammunition stock.

97. Cover the sight.

Declassified in Part - Sanitized Copy Approved for Release @ 50-Yr 2014/05/14 : CIA-RDP81-01043R004600130010-2

Declassified in Part - Sanitized Copy Approved for Release @ 50-Yr 2014/05/14 : CIA-RDP81-01043R004600130010-2

fastening of their cables; check whether the cable plugs are properly connected and locked; see whether there are any cracks on the transmitter brackets.

86. Check the condition of the brackets of the ПДК-45 transmitter gyro-assembly and ДГ МК-3 magnetic amplifier and see whether there are cracks on them and whether they are securely fastened, check also the condition of the sets proper, their shock absorption and the fastening of the cables running to them.

87. Check whether the helicopter oxygen system is charged; check it also for proper air-tightness. Inspect the oxygen hoses, stationary and portable oxygen apparatus and check the amount of oxygen in them.

Armament

88. Check whether the automatic protective devices of the "Armament", "Signal Flares" and "Fire" mains are switched off.

89. Unload the weapons and make sure that they are really unloaded.

90. Clean the weapons (as scheduled in the Instructions).
Note: Preventive replacement of weapon parts should be carried out in compliance with their Service Logs.

91. Clean, inspect and lubricate the mounting (while inspecting pay special attention to the power units).

92. Clean the dust and mud off the sight. Inspect the sight.

93. Check the gun mounting shutter for smooth travelling as well as the operation of the signalling system when the shutter is in the open position.

94. Check the operation of the "In flight" position micro-switch of the mounting.

Declassified in Part - Sanitized Copy Approved for Release @ 50-Yr 2014/05/14 : CIA-RDP81-01043R004600130010-2

Declassified in Part - Sanitized Copy Approved for Release @ 50-Yr 2014/05/14 : CIA-RDP81-01043R004600130010-2

Instrument Equipment

80. Inspect the instruments in the pilot's cabin:

a) wipe the dust and moisture off the instrument board faces and instrument glass covers;

b) make sure that all the instruments are properly fixed and that their external parts are not damaged;

c) compare the readings of the altimeter barometric scale with the pressure near the ground (permissible deflection should not exceed 3 mm. of mercury); check the spur rack of the altimeter;

d) check the instruments to see that the pointers are in their correct positions, taking into consideration the permissible error for the given scale division. The electric instrument pointers are checked with the instruments switched on.

81. Check the electric gyrohorizon and remote gyrocompass (ДГМК) for proper operation; make sure that the spur racks and arresting levers are in good repair. Compare the readings of the ДГМК-3 instrument with those of the КИ-11 instrument (permissible deflections should not exceed 3° taking into consideration the correction for deviation).

82. Check the condition of the Pitot static tubes, see that they are properly secured, that their intake openings are clean and that their heating devices operate properly.

83. Check the clock for precise movement.

84. Check whether the deviation correction Tables for the compass, speed indicator and altimeter are in place.

85. Check the fastening of the receivers and transmitters of the electric instruments on the engine and reductors, the

Declassified in Part - Sanitized Copy Approved for Release @ 50-Yr 2014/05/14 : CIA-RDP81-01043R004600130010-2

Declassified in Part - Sanitized Copy Approved for Release @ 50-Yr 2014/05/14 : CIA-RDP81-01043R004600130010-2

Radio Equipment

70. Take the plug of the electric detonator of responder N°8 of the tetrasidotetryl detonator (TAT) out of the operating sockets and put it into the reserve onces.

71. Check the antennae for proper fastening and shock absorption.

72. Make sure that all the insulators are intact and clean.

73. Check the connection of the antennae lead-ins.

74. Check the entire radio equipment for proper fastening and shock absorption.

75. Remove dust from the radio equipment.

76. Check the cables and remote control flexible shafts for proper fastening.

77. Check the cable plug connectors for proper operation.

78. Inspect the framework of the radio compartment for any cracks, torn off rivets or any mechanical damage; pay special attention to the fastening clamps of the convertor; see that there are no cracks on the KPM filter boxes; check the condition of the time-lag contactor.

79. Cut in the airfield current supply source and check the operating efficiency of the radio equipment and the radio navigation aids:

a) check the performance of the radio compass at its entire performance range;

b) check the operation of the communicating radio set through all its channels;

c) make sure that the radio altimeter indicator and inter-communication system operate properly;

d) check the operating efficiency of the responder; make sure that the received signals correspond to the established codes.

Declassified in Part - Sanitized Copy Approved for Release @ 50-Yr 2014/05/14 : CIA-RDP81-01043R004600130010-2

Declassified in Part - Sanitized Copy Approved for Release @ 50-Yr 2014/05/14 : CIA-RDP81-01043R004600130010-2

necessary locking pieces; pay special attention to the centre-punching of the screws on the reductor type M -1M mechanism, to securing of the wires to the current collector brushes of the main reductor; to the condition of the electric wire bunches and their fastening on the front ring of the engine frame and to the fastening of the headlamps.

64. Check the electric wire bunch plugs on the aircraft engine and main reductor for proper connection.

65. Check the mechanical elements of the mains automatic protective devices, the fuses and their fastening.

66. Check the voltage of the storage batteries and the electrolyte level.

67. Check the condition of the containers; in winter check them also for proper heating.

68. Inspect all the terminal switches of the mechanisms, their fastening and the connection of electric wires to them.

69. Cut in the airfield supply source and check:

a) the electric signalling of the doors;

b) the external and internal electric lighting devices;

c) the helicopter navigation and other lights as well as its headlamps;

d) the cabin lighting and ultra-violet irradiation device;

e) the operation of the remote control electric mechanisms, electric assemblies and automatic devices as well as the solenoids of the engaging clutch; in checking the operation of the supercharger double-speed drive control make sure that the lever is completely shifted from the "1st speed" to the "2nd speed".

Declassified in Part - Sanitized Copy Approved for Release @ 50-Yr 2014/05/14 : CIA-RDP81-01043R004600130010-2

Declassified in Part - Sanitized Copy Approved for Release @ 50-Yr 2014/05/14 : CIA-RDP81-01043R004600130010-2

48. Inspect the gunner's cockpit, check the gun mounting for proper operation.

49. Set in place the locking studs fixing the gunner's hatch cover jettisoning device.

Tail and End Girders

50. Inspect the covering of the tail and end girders; check the condition and the joints securing the stabilizer and tail support.

51. Check the joints fastening the tail girder to the fuselage.

52. Inspect the supporting framework of the tail girder.

53. Check the condition of the tail shaft supports.

Intermediate and Tail Reductors

54. Check whether there is any oil leakage from the reductor.

55. Check the fastening of the reductors.

56. Check the oil level and add oil, if necessary.

Tail Airscrew

57. Check the hub and blades for mechanical damage and cracks.

58. Check the airscrew hub hinges for backlashes and jamming.

59. Lubricate the horizontal hinges.

60. Check the condition of the pipes and distributor of the de-icing system.

Pilot's Cabin

61. Inspect the cabin glass panes; check the condition of the locks and doors. Check the handles of door jettisoning device for proper securing by the locking pieces.

62. Check by shifting the levers of cycle pitch and "pitch-speed control" as well as by pressing the pedals, whether there is any jamming or backlashes in the control mechanisms.

Electric Equipment

63. Check the fastening of the electric equipment items on the aircraft engine and reductor and the presence of the

Declassified in Part - Sanitized Copy Approved for Release @ 50-Yr 2014/05/14 : CIA-RDP81-01043R004600130010-2

Declassified in Part - Sanitized Copy Approved for Release @ 50-Yr 2014/05/14 : CIA-RDP81-01043R004600130010-2

38. Lubricate the slide bushing, the ball hinge of the guide and the rod bearings of the lifting airscrew setting automat, as well as the vertical hinge of the lifting airscrew hub.

39. Check the presence of lubricant and add grease into the horizontal and axial hinges of the lifting airscrew hub, if necessary.

Lubricate the disc bearing of the lifting airscrew setting automat.

Lifting Airscrew Blades

40. Clean the blades from dust, dirt and oil.

41. Check the condition of the rear stringer, edge tippings and linen covering of the blades as well as the condition of the painting on the blade top and bottom surfaces.

42. Check the condition of the leather locks and see to it that they are sufficiently saturated with fish oil.

43. Check the small hatches of the helicopter lights for proper fastening.

Fuselage

44. Inspect the fuselage surface; make sure that there are no cracks or dents and that the rivets securing the covering are tight.

45. Open the hatch of the gasoline panel and check whether there is any leakage through the connections of the pipe lines and assemblies.

46. Inspect the assemblies of the de-icing system, see whether there is any leakage of de-icing fluid through the connections of the pipes and assemblies.

47. Check the adjustment of doors, hatch flaps and make sure that the locks are in good condition.

Declassified in Part - Sanitized Copy Approved for Release @ 50-Yr 2014/05/14 : CIA-RDP81-01043R004600130010-2

Declassified in Part - Sanitized Copy Approved for Release @ 50-Yr 2014/05/14 : CIA-RDP81-01043R004600130010-2

Reductor Compartment

27. Open and inspect the hoods of the reductor compartment. Check them for proper fitting. Check also their locks.
28. Inspect the surface of the reductor body; check the condition and fastening of the assemblies on the reductor body.
29. Check the fastening of the oil pipes.
30. Check the reductor oil system for proper sealing.
31. Inspect the joints securing the reductor to the frame and the latter to the fuselage; check the condition of the reductor frame.
32. Check the fastening of the main shaft along with its elastic clutch.
33. Check the pipe lines and the assemblies of the hydraulic system for proper securing to the helicopter board and for air-tightness, paying special attention to the condition of the hydraulic boosters and seeing to it that they are properly locked; inspect thoroughly the solder of the adjusting chain unit of type БУ-9 hydraulic booster slide valve; make sure that there are no breaks or separation of the solder.
34. Check the level of the hydraulic mixture in the tank.
35. Turn the handles of the 269-МФ filters of the hydraulic system.

Hub and Setting Automat of Lifting Airscrew

36. Inspect the lifting airscrew hub, the aircraft setting automat and the assemblies arranged on them: de-icing distributer ice warning system, type УЭП-47 transmitter, hoses of the de-icing system, current collector.
37. Check the backlashes of the mating parts of the lifting airscrew setting automat and of the blade setting rods.

Declassified in Part - Sanitized Copy Approved for Release @ 50-Yr 2014/05/14 : CIA-RDP81-01043R004600130010-2

Declassified in Part - Sanitized Copy Approved for Release @ 50-Yr 2014/05/14 : CIA-RDP81-01043R004600130010-2

Provision is made for inner air circulation to better cool the most heated parts such as the armature and the commutator. This circulation is effected by the head parts of armature (3) winding which serve as fan blades driving the air through the armature channels.

In addition, at 1,500-watt output ambient air is passed through the commutator cover inner cavity through one of the sleeves on the strap and discharged through the other.

The ГСК-1500 generator is furnished with a flexible shaft which provides elastic coupling with the engine drive and protects the engine from damage when the generator ball bearings jam.

An oil seal prevents engine oil from penetrating into the generator from the drive reducer.

Body (4) is a steel tube to which is welded an end cover with a flange for fastening the generator to the engine.

Inside the body there are four poles (5) with shunt winding coils. The shunt winding is manufactured from enamelled copper wire round in section. The coil wiring diagram is shown in Fig.3.

The poles are made of ЭIA5 sheet electrical steel.

The shunt winding coils are vacuum-impregnated together with the body.

The coils being impregnated and dried together with the body strengthens the design and improves the insulation electrical properties.

The poles are attached to the body with screws whose splines are centre-punched to prevent spontaneous unscrewing.

Commutator cover (6) is of aluminium alloy and is cast together with the terminal box designed as a window which accommodates panel (7) attached to the cover ribs. Support

Declassified in Part - Sanitized Copy Approved for Release @ 50-Yr 2014/05/14 : CIA-RDP81-01043R004600130010-2

Declassified in Part - Sanitized Copy Approved for Release @ 50-Yr 2014/05/14 : CIA-RDP81-01043R004600130010-2

8. Check fastening of engine to the frame and of the frame to the helicopter.
9. Check whether there is any fuel or gasoline leakage through the packing glands of the fastenings and contact surfaces of the helicopter assemblies.
10. Check the drainage pipe unions of the inlet pipes of cylinders 6, 7, 8 and 9 for proper fastening and cleanliness of their channels.
11. Check whether there is any gasoline leakage through the drainage pipe of the gasoline pump.
12. Inspect the honeycombs, flanges and drainage plugs of both oil radiators.
13. Check the bands fastening the radiators and oil tanks.
14. Check all the assemblies of the engine and the MF-1M electric mechanism for proper fastening.
15. Examine the exhaust manifolds and make sure there are no cracks on them. Check the clearances between the manifolds and adjacent assemblies as well as between the parts in their extreme positions. Check the branch pipes for proper movability between the balls; check the exhaust branch pipes for secure fastening and for tight connection to the cylinders.
16. Check the inlet pipes for proper fastening.
17. Check the fastening of spark plug elbows and their position as related to the exhaust branch pipes; the distance between them should be not less than 25 mm.
18. Inspect the gasoline system and check the gasoline pipe lines and the assemblies for proper fastening. Besides, check the gasoline pipe lines for proper sealing. Check the HB-82B pump limb lever for proper travelling up and down till the stop.

Declassified in Part - Sanitized Copy Approved for Release @ 50-Yr 2014/05/14 : CIA-RDP81-01043R004600130010-2

Declassified in Part - Sanitized Copy Approved for Release @ 50-Yr 2014/05/14 : CIA-RDP81-01043R004600130010-2

44. Load the flare carriers.

45. Remove the locking pins securing the gunner's cockpit hatch-cover jettisoning device.

II. Inspection during Starting

1. Disengage the transmission and stop the engine.
2. Check whether there is any leakage of oil on the fuselage sides and engine hoods.
3. Inspect the lifting airscrew.
4. Inspect the tail airscrew.
5. Inspect the landing gear (after a rough landing perform it with special attention).

III. After-Flight Inspection

1. Obtain from the crew information on all the defects. detected during flight.
2. Fill the helicopter with gasoline and oil.

Engine

3. Inspect the outer hood and make sure that there are no dents or cracks on it, check whether the hoods fit closely and whether the hinges and locks are in good repair.
4. Open the outer hood and inspect the inner hood.
5. Remove the left- and the right-hand small hatch-covers and inspect the fastening of the inner hood framework and the engine front part. Check the locks and locking springs.
6. Check the connection of the inner hood to the radiators; check the deflector partition for proper sealing and the sealing edges for proper fastening.
7. By touching the cylinders check their temperature and make sure that there are no cylinders that are only slightly warmed. Inspect the cylinders and make sure that the painting is not damaged.

Declassified in Part - Sanitized Copy Approved for Release @ 50-Yr 2014/05/14 : CIA-RDP81-01043R004600130010-2

Declassified in Part - Sanitized Copy Approved for Release @ 50-Yr 2014/05/14 : CIA-RDP81-01043R004600130010-2

33. With the storage batteries of the helicopter cut into the mains make sure that plug ВЗРВ (blast) is deenergized and cut it into socket BLAST.

34. Check the selector switches and control handles on the boards and panels.

35. Switch on the airfield current supply and check the operating efficiency of the radio equipment and radio navigation aids. After the inspection is over, set all the selector switches of the control boards and panels to their initial position or to ВЫКЛЮЧЕН (OFF) position.

Instructions and Oxygen Equipment

36. Check the instrument panels for proper shock-proofness; wipe the instrument glasses; check whether the positions of the pointers are correct.

37. Check the instruments for proper operation.

38. Check the amount of oxygen in the containers; check the high-and-low-pressure oxygen systems for proper sealing.

39. Check the systems for proper emergency delivery of oxygen. Recharge the helicopter oxygen container and the parachute oxygen apparatus, if necessary.

Armament

40. Make sure that the automatic protective devices for the "Armament", "Signal Flares" and "Fire" mains are switched off.

41. Make sure that the armament compressed air system is properly charged.

42. Remove the cover from the sight and check the condition of the latter.

43. Check the arrangement of the ammunition and the loading of the weapons.

Declassified in Part - Sanitized Copy Approved for Release @ 50-Yr 2014/05/14 : CIA-RDP81-01043R004600130010-2

Declassified in Part - Sanitized Copy Approved for Release @ 50-Yr 2014/05/14 : CIA-RDP81-01043R004600130010-2

23. Inspect the load cabin; check the locks of the loading hatch.

24. Check the air system for proper charging.

25. Check whether the helicopter is properly loaded and make sure that the load is properly secured.

26. Check the presence of de-icing mixture in the tank.

Electric Equipment

27. Check the condition of the fittings of the lighting equipment and the glasses of the navigation and side lights as well as those of the retractable and taxying lights.

28. Check all the automatic protective devices of the mains (АЗС) for proper functioning, check also the switches and selector switches; check the fittings of the ultra-violet irradiation device (УФО) and of the combined lamp head-light (К С).

29. Check the storage battery for proper fastening and the battery terminals for reliable connection.

30. Check the voltage of the storage battery under load. Make sure that the Pitot static tube is properly warmed; before a night flight check also the navigation and other lights of the helicopter.

31. Check under current (from the airfield supply source) the operation of the remote control mechanisms, the lighting and light signalling system.

Radio Equipment

32. Check the radio compass frame glass for proper fastening. Inspect the antennae of the communicating station, responder, radio compass and radio altimeter.

Declassified in Part - Sanitized Copy Approved for Release @ 50-Yr 2014/05/14 : CIA-RDP81-01043R004600130010-2

Declassified in Part - Sanitized Copy Approved for Release @ 50-Yr 2014/05/14 : CIA-RDP81-01043R004600130010-2

10. Check the oil system for proper sealing.
11. Check the fuel system for proper sealing.
12. Inspect the Pitot static tubes; check them for proper fastening and see that their openings are clean; in winter check whether the tubes are properly warmed.
13. Open the side hoods of the reductor compartment and examine the reductor; make sure there are no foreign objects in the compartment.
14. Check the oil system of the reductor and hydraulic system for proper sealing; check the level of mixture in the hydraulic system.
15. Examine the hub of the lifting air-screw; check whether there is any oil leakage through the hub hinge joints.
16. Check the friction dampers for proper tightening and adjust the latter if necessary.
17. Inspect the blades of the lifting airscrew for mechanical damage.

    In winter, remove the ice from the blades; make sure that the openings of the Pitot tubes of the ice warning system as well as the rear drainage openings are not clogged.
18. Examine the fuselage, the rear and end girders, check their surfaces for mechanical damage, and, in winter, see to it that there is no ice or snow on them.
19. Examine the tail airscrew for mechanical damage.
20. Check the hub of the tail airscrew for oil leakage.
21. Check the transmission for easy travel, rotating the tail airscrew by hand.
22. Make sure that the pipes of the tail airscrew deicing system are not damaged and that the lock of the tail reductor measuring tool is properly secured.

Declassified in Part - Sanitized Copy Approved for Release @ 50-Yr 2014/05/14 : CIA-RDP81-01043R004600130010-2

Declassified in Part - Sanitized Copy Approved for Release @ 50-Yr 2014/05/14 : CIA-RDP81-01043R004600130010-2

SECTION ONE

INSPECTIONS OF HELICOPTER

I. Pre-Flight Inspection

1. Remove the cover from the helicopter.
2. Check whether the transmission rotates freely.
3. Drain 1.5-2 litres of gasoline sludge and inspect the gasoline instrument panel.
4. Check the presence of gasoline in the fuel tank and of oil in the oil tank and main reductor.
5. Check the helicopter for proper securing to the ground.
6. Inspect the landing gear.
7. Inspect the cabin and prepare it for engine starting; check:
   a) whether there are any foreign objects in the cabin;
   b) the operation of the loading mechanisms (trimmers);
   c) the deflection of lever "Pitch-Speed Control" and pedals;
   d) the operation of the hydraulic boosters;
   e) the operation of the fire cock and the engine stopping cock;
   f) the helicopter storage battery for proper charging under load;
   g) the operation of the engine and radiator cooling flags;
   h) the brake system pressure;
   i) the level of alcohol in the container and the operation of the wind shield wipers;
   j) the operation of the electric circuit of the transmission engaging clutch.
8. Try the engine with the transmission engaged.
9. Examine the power installation; check whether there are any foreign objects in the engine compartment.

Declassified in Part - Sanitized Copy Approved for Release @ 50-Yr 2014/05/14 : CIA-RDP81-01043R004600130010-2

Declassified in Part - Sanitized Copy Approved for Release @ 50-Yr 2014/05/14 : CIA-RDP81-01043R004600130010-2

It is allowed, however, to carry out the next routine maintenance of a newly installed engine or any other assembly before the scheduled time.

6. Once a year, at regular intervals, change the fluid in the system of the hydraulic boosters, replace the pyrocartridge in the fire-fighting system cylinder head, clean the level of fluid in the landing gear shock-absorbers and add grease into the landing gear hinge joints.

7. Every 5 years check the performance of the helicopter air cylinders, fire fighting and oxygen systems.

Declassified in Part - Sanitized Copy Approved for Release @ 50-Yr 2014/05/14 : CIA-RDP81-01043R004600130010-2

Declassified in Part - Sanitized Copy Approved for Release @ 50-Yr 2014/05/14 : CIA-RDP81-01043R004600130010-2

GENERAL

1. In performing routine maintenance operations follow the order and methods described and the operating and maintenance instructions for aircraft material.

2. Prior to performing any kind of routine maintenance examine the aircraft material in compliance with the "After-Flight Routine Inspection".

3. To ensure trouble-free operation of the aircraft material under various climatic conditions of airfield disposition (high humidity, dusty ground, etc.) or in case of intensified operation of separate units when fulfilling special missions (increased number of landings, intensive employment of helicopter armament, etc.), as well as in cases of long periods of standstill or replacement of engines, the unit engineer may order to perform extraordinary maintenance of the entire aircraft material or of separate material items and their assemblies in compliance with these Routine Maintenance Instructions.

4. If during three months the helicopter has not been in flight for 25±5 hours there is, consequently, no need to perform the routine maintenance operations indicated in item "After Every 25±5 Flying Hours", and it is recommended to perform the operations indicated in section "After Every 3 Months ±10 Days of Parking").

5. In case the necessity arises to remove the engine before its service hours are exhausted or to replace other assemblies, their routine maintenance operations should be performed in compliance with their actual service hours but they should be carried out simultaneously with the next routine maintenance of the entire helicopter.

Declassified in Part - Sanitized Copy Approved for Release @ 50-Yr 2014/05/14 : CIA-RDP81-01043R004600130010-2

Declassified in Part - Sanitized Copy Approved for Release @ 50-Yr 2014/05/14 : CIA-RDP81-01043R004600130010-2

CONTENTS

	Page
General	3
Section One. Inspections of Helicopter	
I. Pre-Flight Inspection	5
II. Inspection During Starting	9
III. After-Flight Inspection	9
Section Two. Routine Maintenance	20
I. After First Trial of Engine	20
II. Routine Maintenance According to Number of Flying Hours	21
III. Routine Maintenance During Helicopter Storage Period	35
Appendices:	
1. Lubrication Diagram for Engine, Transmission Assemblies, Airscrew Hubs and Lifting Airscrew Setting Automat	37
2. Lubrication Chart for Engine, Transmission Assemblies, Airscrew Hubs and Lifting Airscrew Setting Automat	39
3. Lubrication Chart for Helicopter Control System, Hydraulic System and Landing Gear	43

Declassified in Part - Sanitized Copy Approved for Release @ 50-Yr 2014/05/14 : CIA-RDP81-01043R004600130010-2

Declassified in Part - Sanitized Copy Approved for Release @ 50-Yr 2014/05/14 : CIA-RDP81-01043R004600130010-2

23152

HELICOPTER ROUTINE

MAINTENANCE INSTRUCTIONS N° 1 - B

Declassified in Part - Sanitized Copy Approved for Release @ 50-Yr 2014/05/14 : CIA-RDP81-01043R004600130010-2

Declassified in Part - Sanitized Copy Approved for Release @ 50-Yr 2014/05/14 : CIA-RDP81-01043R004600130010-2

Declassified in Part - Sanitized Copy Approved for Release @ 50-Yr 2014/05/14 : CIA-RDP81-01043R004600130010-2

Declassified in Part - Sanitized Copy Approved for Release @ 50-Yr 2014/05/14 : CIA-RDP81-01043R004600130010-2

HELICOPTER ROUTINE

MAINTENANCE INSTRUCTIONS No 1-B

Declassified in Part - Sanitized Copy Approved for Release @ 50-Yr 2014/05/14 : CIA-RDP81-01043R004600130010-2

Declassified in Part - Sanitized Copy Approved for Release @ 50-Yr 2014/05/14 : CIA-RDP81-01043R004600130010-2

ПЕРЕЧНИ

Одиночного комплекта запасных частей
Наземного эксплоатационного оборудования
Бортового инструмента

К самолету АН-2

Declassified in Part - Sanitized Copy Approved for Release @ 50-Yr 2014/05/14 : CIA-RDP81-01043R004600130010-2

Declassified in Part - Sanitized Copy Approved for Release @ 50-Yr 2014/05/14 : CIA-RDP81-01043R004600130010-2

С П И С О К

Комплекта запасных частей к самолету АН-2

№№ пп	Наименование деталей	№ чертежа	Единица изм.	Количество	№№ упаковщиков
1	2	3	4	5	6
1.	Стекло окна	П0150-51	шт.	2	1
2.	Тиковая лента		мт.	20	2
3.	Прокладка	П0105-28	шт.	2	1
4.	Вкладыш	80с8	"	2	2
5.	Резиновая трубка	П0208-50	"	2	1
6.	-"-	П0209-11	"	2	1
7.	Амортизатор	П0208-40	"	1	2
8.	Амортизатор предкрылка	П2902-64	"	2	2
9.	Стекло фары	А2107-3	"	1	1
10.	Стекло рамки АРК-5	А0101-81-5	"	1	1
11.	Б о л т	П4100-62-12	"-	2	2
12.	Б о л т	П4100-63-12	"	2	2
13.	-"-	П4100-64	"	1	2
14.	-"-	П4100-65	"	1	2
15.	-"-	П4200-9	"	1	2

Declassified in Part - Sanitized Copy Approved for Release @ 50-Yr 2014/05/14 : CIA-RDP81-01043R004600130010-2

Declassified in Part - Sanitized Copy Approved for Release @ 50-Yr 2014/05/14 : CIA-RDP81-01043R004600130010-2

1	2	3	4	5	6
16	Болт	Ш4200-2	шт.	1	2
17	-"-	Ш4200-3	"	1	-"-
18	-"-	Ш3300-95	"	1	-"-
19	Пружина	Ш0418-18	"	20	1
20	Втулка	Ш4100-72	"	4	2
21	Прокладка	Ш4101-1	"	2	-"-
22	-"-	Ш4101-3	"	2	-"-
23	-"-	Ш4101-11	"	3	2
24	Манжет	Ш4101-5	"	6	2
25	Зарядный клапан	3501-8	"	1	2
26	Шарнирный подшипник.	ПС25	"	2	2
27	Прокладка	Ш4202-3	"	1	2
28	Манжет	Ш4202-6	"	2	2
29	Кольцо резиновое.	Ш4201-05	"	1	2
30	-"-	Ш4202-1	"	1	2
31	Б о у д е н	ГОСТ288-41	мт.	1,2	2
32	В а л и к	124х6-18-14,5	шт.	2	2
33	Т е н д е р	22х4	"	2	2
34	-"-	22х6	"	4	2 Прилагается к тр-ру 5000-41-42
35	Т р у б а	Ш5210-20	"	1	2
36	-"-	Ш5210-23	"	1	2

Declassified in Part - Sanitized Copy Approved for Release @ 50-Yr 2014/05/14 : CIA-RDP81-01043R004600130010-2

Declassified in Part - Sanitized Copy Approved for Release @ 50-Yr 2014/05/14 : CIA-RDP81-01043R004600130010-2

	[illegible]	[illegible]	[illegible]	[illegible]	2
	[illegible]	[illegible]	"	[illegible]	2
	[illegible]	[illegible]	"	[illegible]	2
	[illegible]	[illegible]	"	[illegible]	1
	[illegible]	[illegible]	"	[illegible]	1
	[illegible]	[illegible]	"	[illegible]	1
	[illegible]	[illegible]	"	[illegible]	1
	[illegible]	[illegible]	"	[illegible]	2
	[illegible]	[illegible]	"	[illegible]	1
	[illegible]	[illegible]	"	[illegible]	1
	[illegible]	[illegible]	"	[illegible]	1
	[illegible]	[illegible]	"	1	1
	[illegible]	[illegible]	"	1	1
	[illegible]	[illegible]	"	1	1
	[illegible]	[illegible]	"	1	2
	[illegible]	[illegible]	"	[illegible]	2
52	Палька	1-[illegible]-63	"	12	2
54	Хомут	[illegible]-155	"	1	1
55	Болт	[illegible]-[illegible]	"	[illegible]	2
56	Замок	[illegible]-4	"	[illegible]	2
57	Трубка	[illegible]	"	[illegible]	1
58	Винт	150x[illegible]-32	"	[illegible]	2
59	Шайба	370МЦ4-580	"	1	1
60	-"-	370МЦ4-625	"	1	1

Declassified in Part - Sanitized Copy Approved for Release @ 50-Yr 2014/05/14 : CIA-RDP81-01043R004600130010-2

Declassified in Part - Sanitized Copy Approved for Release @ 50-Yr 2014/05/14 : CIA-RDP81-01043R004600130010-2

I					
I		[illegible]	шт.	I	1
[illegible]	"-"	[illegible]	"	[illegible]	1
[illegible]	"-"	M [illegible]	"	[illegible]	1
[illegible]	[illegible]	[illegible]	"	[illegible]	2
[illegible]	"-"	[illegible]	"	[illegible]	2
[illegible]	[illegible]	[illegible]	"	[illegible]	1
[illegible]	[illegible]	[illegible]	"	I	1
[illegible]	"-"	[illegible]	"	I	1
[illegible]	[illegible]	[illegible]	"	I	2
[illegible]	Болт	[illegible]	"	[illegible]	2
[illegible]	Проклепка	[illegible]	"	[illegible]	2
[illegible]	Трубка	[illegible]	"	I	2
[illegible]	Лента резиновая	[illegible]	"	I	2
[illegible]	"-"	[illegible]	"	I	2
[illegible]	[illegible]	[illegible]	"	[illegible]	2
[illegible]	Болт	[illegible]	"	[illegible]	2
[illegible]	Амортизатор	[illegible]	"	I3	2
[illegible]	"-"	6400-51	"	I6	2
[illegible]	Кольцо	6400-12	"	9	2
[illegible]	Амортизатор	[illegible]	"	[illegible]	2
80	Болт	[illegible]	"	[illegible]	2
81	Гайка	[illegible]	"	I2	2
82	Капельник	[illegible]	"	I	1

Declassified in Part - Sanitized Copy Approved for Release @ 50-Yr 2014/05/14 : CIA-RDP81-01043R004600130010-2

Declassified in Part - Sanitized Copy Approved for Release @ 50-Yr 2014/05/14 : CIA-RDP81-01043R004600130010-2

№ п/п					
[illegible]	Втулка	[illegible]	[illegible]	[illegible]	2
[illegible]	Втулка	[illegible]	"	[illegible]	2
[illegible]	Амортизатор	[illegible]	"	[illegible]	2
[illegible]	Втулка	[illegible]	"	[illegible]	2
[illegible]	Уплотнитель резинового.	[illegible]	"	[illegible]	2
[illegible]	Кольцо резиновое кольцо.	[illegible]	"	[illegible]	2
[illegible]	[illegible]	[illegible]	"	[illegible]	2
[illegible]	Ток вилка	[illegible]		[illegible]	3
[illegible]	Накладка на амортизатора резинов.	[illegible]	"	[illegible]	2
[illegible]	Профиль резинов.	[illegible]	шт.	[illegible]	1
[illegible]	Болт	[illegible]	шт.	[illegible]	2
[illegible]	Штифт	[illegible]	"	[illegible]	2
95	Пружина	[illegible]			2
[illegible]	Амортизатор	[illegible]	"	[illegible]	2
97	Гибкий шланг	[illegible]	"	[illegible]	2
98	Хомут	[illegible]	"	1	2
[illegible]	Перемычка	[illegible]	"	[illegible]	2
100	Кран зарядки сети.	[illegible]	"	1	2
101	Амортизатор	[illegible]	"	[illegible]	2
102	-"-	[illegible]	"	[illegible]	2
103	Хомут	[illegible]	"	[illegible]	2
104	Вкладыш с обоймой 8ГСНI 8.	[illegible]	"	[illegible]	2

Declassified in Part - Sanitized Copy Approved for Release @ 50-Yr 2014/05/14 : CIA-RDP81-01043R004600130010-2

Declassified in Part - Sanitized Copy Approved for Release @ 50-Yr 2014/05/14 : CIA-RDP81-01043R004600130010-2

№	2	3	4	5	6
105	Резиновая прокладка.	А5801-10-1,2	шт.	3	2
106	Резиновая трубка	Ш6909-61-5	"	1	2
107	Б о л т	1301с5-14	"	20	2
108	Гайка	1400с5	"	24	2
109	Б о л т	1304с5-14	"	6	2
110	Болт	1304с5-22	"	8	2
111	-"-	1307с4-14	"	6	2
112	-"-	1304с5-12	"	1	2
113	Гайка	1406с6	"	41	2
114	Б о л т	1305с12-44	"	4	2
115	Гайка	1411с12	"	4	2
116	Б о л т	1307с5-22	"	6	2
117	Гайка	1411с5	"	8	2
118	Болт	Ш5800-62	"	2	2
119	-"-	1312с6-24	"	15	2
120	-"-	1312с6-28	"	2	2
121	-"-	1315с4-10	"	8	2
122	Г а й к а	1400с4	"	22	2
123	Б о л т	1315с5-20	"	5	2
124	-"-	1315с5-12	"	30	2
125	-"-	1315с4-12	"	15	2

Declassified in Part - Sanitized Copy Approved for Release @ 50-Yr 2014/05/14 : CIA-RDP81-01043R004600130010-2

Declassified in Part - Sanitized Copy Approved for Release @ 50-Yr 2014/05/14 : CIA-RDP81-01043R004600130010-2

	2	3	4	5	6
	Б о л т	1314с6-24	шт.	14	2
.	Анкерная гайка	966А50-5	"	10	2
.	Винт безвозвратов	1227с5-14	"	75	2
.	-"-	1327с5-16	"	75	2
.	Б о л т	1875с5-14-2	"	2	2
.	Шарик стальной	Ø 5 мм.	"	2	2
2.	Винт с пружиной и пистоном	1284с8-12	"	10	2
3.	Винт -"-	1284с10-14	"	2	2
4.	-"- -"-	1284с10-15	"	5	2
5.	-"- -"-	1284с10-19	"	20	2
6.	Штауфер	123А	"	4	2
7.	Проволока КО	Ø 0,5	кг.	0,3	2
8	-"-	Ø 1,0	"	0,4	2
9	Т р о с	Ш5000-41-1,2	шт.	2	2
0	-"-	Ш5000-42-1,2	шт.	2	2
1.	Трос управления Р-7 с тен-дерами /7х7х1,8/	6510-0 н/с е=2500	"	2	2
2.	Серьга с тросом	Ш5110-23-1,2	"	2	2
2.	Кронштейн	Ш6801-191	"	1	Устанавливается по согласованию 2
4	Заслонка	Ш6801-192	"	1	2

Declassified in Part - Sanitized Copy Approved for Release @ 50-Yr 2014/05/14 : CIA-RDP81-01043R004600130010-2

Declassified in Part - Sanitized Copy Approved for Release @ 50-Yr 2014/05/14 : CIA-RDP81-01043R004600130010-2

1	2	3	4	5	6
145	Гайка	1400с10	шт.	1	2
146	Дюритовый шланг	309сн6	"	1	1/в=250мм
147	-"-	309сн27	"	1	1/в=500мм
148	-"-	309сн4	"	1	1/в=1000мм
149	Заклепка	851А3-9	кг	0,045	2
150	-"-	851А2,5-10	"	0,025	2
151	-"-	851А4-11	"	0,055	2
152	-"-	851А4-14	"	0,015	2
153	-"-	854А3-10	"	0,010	2
154	-"-	854А4-10	"	0,004	2
155	-"-	859А2,6-6	"	0,014	2
156	-"-	859А3-10	"	0,035	2
157	-"-	859А3,5-9	"	0,010	2
158	-"-	859А4-12	"	0,010	2
159	-"-	[illegible]	"	0,030	2
160	-"-	862А3-10	"	0,025	2
161	-"-	862А3,5-7	"	0,005	2
162	-"-	862А4-12	"	0,004	2
163	-"-	866А2,6-7	"	0,050	2
164	-"-	866А3-10	"	0,120	2
165	-"-	866А3,5-8	"	0,006	2
166	-"-	866А4-12	"	0,007	2
167	-"-	871А3-9	"	0,020	2

Declassified in Part - Sanitized Copy Approved for Release @ 50-Yr 2014/05/14 : CIA-RDP81-01043R004600130010-2

Declassified in Part - Sanitized Copy Approved for Release @ 50-Yr 2014/05/14 : CIA-RDP81-01043R004600130010-2

	2	3	4	5	6
8.	Шплинт	ГОСТ397-41 5 -60	кг.	0,1	2
9	-"-	-"-2,5-30	"	0,05	2
0	-"-	-"-1,5-15	"	0,05	2
1	-"-	-"-0-20	"	0,04	2
2.	-"-	-"-1-12	"	0,03	2
3.	-"-	-"-1,5-8	"	0,03	2
4.	-"-	-" 1,5-10	"	0,03	2
5.	Коуш	57с4,5	"	8	2
6.	-"-	57с5,5	"	4	2
7.	Шарикоподшипник	1006-ОСТ6266	"	8	2
8.	Тандер	П5110-21	"	4	2
9.	Замок заделки тросов.	81сн1,5	"	2	2
0.	Шайба к пакету секторов	П7005-38	"	1	2
1.	Шайба к пакету секторов	П7005-39	"	1	2
2.	-"-	П7005-40	"	7	2
3.	-"-	П7005-41	"	2	2
4.	-"-	П7005-42	"	4	2
5.	-"-	А7005-273-1	"	2	2

Declassified in Part - Sanitized Copy Approved for Release @ 50-Yr 2014/05/14 : CIA-RDP81-01043R004600130010-2

Declassified in Part - Sanitized Copy Approved for Release @ 50-Yr 2014/05/14 : CIA-RDP81-01043R004600130010-2

1	2	3	4	5	6
[illegible]	Трос заземления.	[illegible]104-12	шт.	I	1
[illegible]	Подшипник	[illegible]	"	4	2
[illegible]	Гайка	[illegible]512-166	"	I2	2
[illegible]	Болт	[illegible]-182	"	6	2
[illegible]	Гайка	[illegible]512-152	"	6	2
[illegible]	Шайба	[illegible]512-154	"	24	2
[illegible]	Шплинт	3x35	"	I2	2
[illegible]	Крышка люка АРК-5 с петлей и замком.	[illegible]0I0I-II[illegible]-I	"	I	1
[illegible]	Аппарат собранный.	[illegible]09-0-[illegible]	"	I	1
	ЗАПАСНЫЕ ЧАСТИ И ИНСТРУМЕНТ К ГОТОВЫМ ИЗДЕЛИЯМ.				
[illegible]	Запчасти и монтаж.инструмент винта.	По упаковочному списку.	к-т	I	2 Упаков. в бумагу.
[illegible]	Щетка к электромеханизму УР7-М.	СБ8	шт.	4	2
[illegible]	Регулятор.	Р7-Е	"	I	2
[illegible]	Запчасти к переключат. ПМ-I.	По комплект. ведомости.	к-т	I	2
[illegible]	Запчасти к бензонасосу БПК-4.	-"-	"	I	1
[illegible]	Запчасти к изделию "КЛЕН"	По формуляру	"	I	1
[illegible]	Запчасти к ручному насосу РПА-I-е.	По комплект. ведомости.	"	I	2
[illegible]	Запчасти и инструмент к изделию "КРИСТАЛЛ" и РУ-III М.	-"-	"	I	2
[illegible]	Запчасти к кадесам 800 х 280.	-"-	"	I	1
[illegible]	Запчасти к кадесам [illegible] х 210.	-"-	"	I	1
[illegible]	[illegible] к [illegible] ЗИТ-12.	-"-	[illegible]	I	[illegible]

Declassified in Part - Sanitized Copy Approved for Release @ 50-Yr 2014/05/14 : CIA-RDP81-01043R004600130010-2

Declassified in Part - Sanitized Copy Approved for Release @ 50-Yr 2014/05/14 : CIA-RDP81-01043R004600130010-2

	2	3	4	5	6
06	Диамагнитная отвертка и лампочка 25в. 0,15А. к компасу КИ-12.	По комплект. ведомости.	шт.	1	2
		-"-	"	2	2
7	Спец.ключ к УЗП-47 и к УПЗ-48	09-520-10	"	2	2
8	Запчасти к РВЭ-45.		к-т	1	2
9	Запасные части к РСБ-5	По комплект. ведомости.	"	1	1
0	Запасные части к изделию АРК-5.	-"-	"	1	1
	Запчасти к изделию МРП-48	-"-	"	1	1
2	Запасные части к изделию СПУ-5.	-"-	"	1	1
3	Гибкий валик ТЭ-45.		шт.	1	1
4	Лампы фар 24 V 220 W		"	2	1
5	Запчасти к ПАГ-1Ф	ПАГ-1Ф	к-т	1	2
6	Запасные части к изделию 08		"	1	1
7	Запасные части к изделию МА-250.		"	1	2
8	Вилка к переносной лампе.		шт.	2	2
9	Запасные части к изделию МА-100.		к-т	1	2
0	Фотоаппарат к изделию 12А-20	По паспорту	"	1	2
	Шланг подводящий смазку стойки масел, [illegible] колес и обрезного [illegible].	А5802-1	шт.	1	2 по спис ка заво дата оберуж ения.
2	Прибор для проверки [illegible]	62740/028	к-т	1	2 -"-
3	[illegible]	[illegible]	шт.	1	1 -"-

Declassified in Part - Sanitized Copy Approved for Release @ 50-Yr 2014/05/14 : CIA-RDP81-01043R004600130010-2

Declassified in Part - Sanitized Copy Approved for Release @ 50-Yr 2014/05/14 : CIA-RDP81-01043R004600130010-2

1	2	3	4	5	6
4	Кабель зарядного электрощитка.	7206-241	шт.	1	По числу на каждого обслуживания.
5	Прокладка к бензобаку.		"	10	2
6	Компрессор	АК-50М	"	1	2
7	Прокладка фильтра.	8206Д1	"	2	2
8	Шланг кислородных масок.	КШ-10	"	2	1
9	Прокладка О-10 к ЭК-44		"	4	2
0	Прокладка О-5 к ЭК-44		"	2	2
1	Запчасти к мотору УТ-6Д		"	3	2
2	Запчасти к СНП		к-т	1	2
3	Винт к ЭМИ-ЭК и ТУЭ-48.	ГОСТ 1477-42 3х5	шт.	4	2
	Кислородная маска	КМ-18	шт.	2	1
	Пластинка	6912-150-3	шт.	3	2
	Заклепка	2015а3х12	шт.	3	2
	Запчасти к изделию 07		к-т	1	1

ПРЕДСТАВИТЕЛЬ ЗАВОДА,

Declassified in Part - Sanitized Copy Approved for Release @ 50-Yr 2014/05/14 : CIA-RDP81-01043R004600130010-2

Declassified in Part - Sanitized Copy Approved for Release @ 50-Yr 2014/05/14 : CIA-RDP81-01043R004600130010-2

ПЕРЕЧЕНЬ

Наземно-эксплоатационного оборудования к самолету АН-2 № 16709

№ пп	Наименование	№ чертежей	Ед. изм.	Количество	Примечание:
1	2	3	4	5	6
	I. ЧЕХЛЫ.				
1	Чехол на РВ-2.	А7108-32	шт.	1	
2	Летний чехол капота.	ЭШ-15	"	1	
3	Зимний чехол капота.	ЭШ-14	"	1	
4	Чехол на воздушн.винт	ЭШ-4; ЭШ-5	к-т	1	
5	Чехлы на колеса.	ЭШ-1	шт.	2	
6	Чехол зимний на маслорадиатор.	А6204-124	"	1	
7	Чехол на трубку "ПИТО"	ЭШ-2	"	1	
8	Чехол на Р-7Е.	А6500-181	"	1	
9	Подушка туннели маслорадиатора.	А6905-200	"	1	
10	Чехол на РСБ-5.	7108-40	"	1	
11	Чехол на втулку винта.	А6912-170	"	1	
12	Чехол на термометр наружного воздуха.	ЭШ-3	"	1	
13	Чехол фонаря.	ЭШ-16	"	1	
	II. АВТОМОБИЛЬНОЕ ОБОРУДОВАНИЕ.				
14	Вахта для [illegible]	[illegible]	шт.	1	
15	Вахта для [illegible]	[illegible]	"	1	
16	Вахта для [illegible]	[illegible]	"	1	

Declassified in Part - Sanitized Copy Approved for Release @ 50-Yr 2014/05/14 : CIA-RDP81-01043R004600130010-2

Declassified in Part - Sanitized Copy Approved for Release @ 50-Yr 2014/05/14 : CIA-RDP81-01043R004600130010-2

1		3	4	5	6
17	Воронка для антиобледенительной жидкости .	63740/098	шт.	I	
18	Шланг подзарядки стойки шасси, стойки костыля, тормозных и костыльного колес и баллонов.	А5802-I	"	I	
19	Трубы подогрева мотора.	А6911-101	"	I	
20	Прибор для проверки давления в стойках шасси и костыля.	63740/028	"	I	
21	Приспособление для крепления предкрылков на стоянке.	Ш2600-36	"	I	
22	Стопор кабинный .	Ш5101-31	"	I	
23	Стопор штормовой.	Ш2500-112	к-т	I	
24	Стопор штормовой.	Ш2216-126	шт	I	
25	Трап-настил.	63740/088	"	2	
26	Переносная лампа со шнуром.	ПЛ-36	"	I	
27	Кабель аэродромного электропитания.	Ш7208-241	"	I	
28	Направляющая вилка костыльного колеса.	63740/087Б	"	I	К данному самолету №№ 28, 29 30, 31, 4 37.
29	Трос для буксирования самолета.	241-15	"	I	
30	Ковелок под хвостовую часть.	63740/017Б	"	I	
31	Ковелок под фюзеляж.	63740/016В	"	2	
32	Колодки тормозные под колеса.	63740/099В	"	2	
33	Ключи от дверей кабины пилота.	Ш0105-20	"	2	
34	Ключи от дверей самолета.	Ш0206-67	"	2	
35	Подушки сидения.	Ш0104-70	"	2	
36	Шланг для заправки бензосистемы от электропомпы.	Ш6106-30	"	I	
37	Съемник для разборки и сборки костыля.	62500/002	"	I	

Declassified in Part - Sanitized Copy Approved for Release @ 50-Yr 2014/05/14 : CIA-RDP81-01043R004600130010-2

Declassified in Part - Sanitized Copy Approved for Release @ 50-Yr 2014/05/14 : CIA-RDP81-01043R004600130010-2

1	2	3	4	5	6
[illegible]	Складывающиеся стремянки.	62740/261	шт.	1	
[illegible]9	Трос для швартовки с-та на земле.	62880/016	к-т	1	
[illegible]0	Бидон для противообледенительной жидкости.	62700/003А	шт.	1	
[illegible]	Сетка.	Ш0422-65	"	1	
[illegible]	Трос для швартовки грузов	Ш0[illegible]-70	"	9	
[illegible]	Ш т о р а.	Ш0[illegible]0-70	"	1	
[illegible]	Домкрат.	Ш9500-0	"	1	
[illegible]5	Запчасти к мотору АШ-62ИР		к-т	1	упакованы в ящ №4
[illegible]6	Карт-сумка к мотору АШ-62ИР		шт.	1	
47	Колодки	0422-85	-"-	4.	

Примечание: Детали позиций №№ 18, 20, 26 и 27 упакованы в ящике одиночного комплекта. №№ 1, 2

ПРЕДСТАВИТЕЛЬ ЗАВОДА

Declassified in Part - Sanitized Copy Approved for Release @ 50-Yr 2014/05/14 : CIA-RDP81-01043R004600130010-2

Declassified in Part - Sanitized Copy Approved for Release @ 50-Yr 2014/05/14 : CIA-RDP81-01043R004600130010-2

С П И С О К

Бортового инструмента машины № 16709

№№ пп.	Наименование инструмента и его размер.	№. чертежа инструмента.	Количество.	Примечание:
1	2	3	4	5
1	Сумка для инструмента.	64650/058А	1	
2	Плоскогубцы комбиниров.	200 ОСТ/НКТМ 6597-39	1	
3	Круглогубцы.	175 ОСТ/НКТМ 6595-39	1	
4	К у с а ч к и.	175 ОСТ/НКТМ 6596-39	1	
5	Ключ разводной № 2.	30 ОСТ/НКТМ 6816-39	1	
6	Молоток на 400г.с ручкой 54636/005 и клином 54652/102.	54200/006	1	
7	Отвертка 150 мм.	5 ОСТ/НКТМ 6592-39	1	
8	Отвертка 250 мм.	64650/024	1	
9	Спец.отвертка для замков "Даус".	64610/001	1	
10	Напильник 3 гран.личной е=200 с ручкой.	20171-40	1	
11	Напильник круглый драчевый е=200 с ручкой.	20171-40	1	
12	Напильник плоский драчев.е=200 с ручкой.	20160-40	1	

Declassified in Part - Sanitized Copy Approved for Release @ 50-Yr 2014/05/14 : CIA-RDP81-01043R004600130010-2

Declassified in Part - Sanitized Copy Approved for Release @ 50-Yr 2014/05/14 : CIA-RDP81-01043R004600130010-2

1	2	3	4	5
12	Нож охотничий армейский /6-ти предметный/.	Готовое изделие.	1	
14	Шприц для заливки цилиндров мотора с шаровым наконечником.	63740/027	1	
15	Тавотница	64650/015	1	
16	Щуп /0,05÷1мм./ набор из 12 пластин.	№ 5 готовое изделие.	1	
17	Шило для заплетки тросов.	64650/017	1	
18	Зубило скошенное с=150мм.	64800/003	1	
19	Керн с=125 мм.	64900/005	1	
20	Бородок с=120 мм.	64800/004	1	
21	Шпинтадор	64650/018	1	
22	Ключ для цепи-расчалок.	64400/050А	2	
23	Выколотка ø8;10;12;14мм.	64900/007	4	
24	Выколотка ø16 мм.	64900/006	1	
25	Ключ для гайки крепления шкворня =75 мм.	64400/010	1	
26	Насос для пистолетов.	64650/014	1	
27	Ключ гаечный 2-х сторонний 6х7	64400/001	1	
28	-"- 7х9	64400/002	1	
29	-"- 9х11	64400/003	1	
30	-"- 11х14	64400/004	1	
31	-"- 14х17	64400/005	1	
32	-"- 17х19	64400/006	1	
[illegible]	-"- 19х22	64400/008	1	
[illegible]	-"- [illegible]27	[illegible]	1	
[illegible]	-"- [illegible]	64400/009	1	

Declassified in Part - Sanitized Copy Approved for Release @ 50-Yr 2014/05/14 : CIA-RDP81-01043R004600130010-2

Declassified in Part - Sanitized Copy Approved for Release @ 50-Yr 2014/05/14 : CIA-RDP81-01043R004600130010-2

1	2	3	4	5
36	Ключ гаечный двусторонний 24x26	64400/013	1	
37	Сменные головки к торцевым ключам -5;7;9	54425-18 291;292;295	3	
37а	Вороток ключей для сменных головок.	54425-12 272;275;278	2	
38	Сменные головки -11;14;17;19.	54425-18 295; 457; 402; 402	4	
39	Ключ торцовый для гаек стыков баков крыла.	64400/019	1	
40	Ключ для снятия ушек-кронштейн.	ЗШ-66-11	1	
41	Тиски ручные.	125 ОСТ/НКТМ 6592-39	1	
42	Дрель ручная со сверлами Ø2; 2,5; 3; 3,5; 4; 5.	ПР-402	1	На 1 шт. каждого размера.
43	Ножовка /ножовка и для пилотка/.	64650/022	1	
44	Штангенциркуль	54322/001	1	
45	Приспособление для [illegible]	54210/022	1	
46	Ключ [illegible]	64400/026	1	
47	Напильник [illegible]	61900/[illegible]	1	
48	[illegible]	64400/012	1	
49	[illegible]	64400/[illegible]	1	

Declassified in Part - Sanitized Copy Approved for Release @ 50-Yr 2014/05/14 : CIA-RDP81-01043R004600130010-2

Declassified in Part - Sanitized Copy Approved for Release @ 50-Yr 2014/05/14 : CIA-RDP81-01043R004600130010-2

С П И С О К

Комплекта запасных частей к самолету АН-2
№ 16709

№ пп	Наименование деталей	№ чертежа	Ед. изм.	Количч.	№ упаковщиков
1	2	3	4	5	6
1.	Стекло окна	П0150-51	шт.	2	1
2.	Цокольная лента		мт.	20	2
3.	Прокладка	П0105-28	шт.	[illegible]	1
4.	Вкладыш	90с8	"	[illegible]	2
5.	Резиновая трубка	П0[illegible]-59	"	2	1
6.	-"-	П0[illegible]09-11	"	2	1
7.	Амортизатор	П0[illegible]09-40	"	1	2
8.	Амортизатор предкрылка	П2002-64	"	2	2
9.	Стекло фары	А2107-3	"	1	1
10.	Стекло рамки АРК-5	А0101-81-5	"	1	1
11.	Б о л т	Ш4100-62-12	"-	2	2
12.	Б о л т	Ш4100-63-12	"	2	2
13.	-"-	Ш4100-64	"	1	2
14.	-"-	Ш4100-65	"	1	2
15.	-"-	П4200-9	"	1	2

Declassified in Part - Sanitized Copy Approved for Release @ 50-Yr 2014/05/14 : CIA-RDP81-01043R004600130010-2

Declassified in Part - Sanitized Copy Approved for Release @ 50-Yr 2014/05/14 : CIA-RDP81-01043R004600130010-2

1	2	3	4	5	6
16	Болт	Ш4200-2	шт.	1	2
17	-"-	Ш4200-3	"	1	-"-
18	-"-	Ш3300-95	"	1	-"-
19	Пружина	Ш0418-18	"	20	1
20	Втулка	Ш4100-72	"	4	2
21	Прокладка	Ш4101-1	"	2	-"-
22	-"-	Ш4101-3	"	2	-"-
23	-"-	Ш4101-11	"	3	2
24	Манжет	Ш4101-5	"	6	2
25	Зарядный клапан	3501-а	"	1	2
26	Шарнирный подшипник.	ШС25	"	2	2
27	Прокладка	Ш4202-3	"	1	2
28	Манжет	Ш4202-6	"	2	2
29	Кольцо фетровое.	Ш4201-05	"	1	2
30	-"-	Ш4202-1	"	1	2
31	Б р у д е н	3ГОСТ388-41	мт.	1,2	2
32	В а л и к	1240х6-18-14,5	шт.	2	2
33	Т е н д е р	228х4	"	2	2
34	-"-	228х6	"	4	2 Принадлежат к гр. ВУ 5050-41; -42
35	Т я г а	Ш5210-20	"	1	2
36	-"-	Ш5210-22	"	1	2

Declassified in Part - Sanitized Copy Approved for Release @ 50-Yr 2014/05/14 : CIA-RDP81-01043R004600130010-2

Declassified in Part - Sanitized Copy Approved for Release @ 50-Yr 2014/05/14 : CIA-RDP81-01043R004600130010-2

1	2	3	4	5	6
37	Тяга	Ш5210-20	шт.	1	2
38	Ось	Ш5210-01	"	1	2
39	Вкладыш	Ш5800-5	"	4	2
40	Шланг	Ш5800-52-1,2	"	2	1
41	-"-	Ш5800-54-1,2	"	2	1
42	-"-	Ш5800-12-1,2	"	2	1
43	Трубка	А5800-70	"	2	1
44	Зарядный штуцер	Ш5800-20	"	1	1
45	Хомут	Ш6800-154-1	"	1	1
46	-"-	Ш6800-154-2	"	1	1
47	-"-	Ш6800-154-3	"	1	1
48	-"-	Ш6800-154-4	"	1	1
49	-"-	Ш6800-154-5	"	1	1
50	-"-	Ш6800-154-12	"	1	1
51	Болт	1802с6-42-39,5	"	12	2
52	-"-	1302с6-56	"	2	2
53	Гайка	1412с6	"	12	2
54	Хомут	Ш6800-155	"	1	1
55	Болт	Ш6800-201	"	4	2
56	Заглушка	Ш6100-4	"	2	2
57	Трубка	А6100-224-1,2	"	2	1
58	Болт	1204с5-62	"	4	2
59	Шланг	670м14-590	"	1	1
60	-"-	670м14-625	"	1	1

Declassified in Part - Sanitized Copy Approved for Release @ 50-Yr 2014/05/14 : CIA-RDP81-01043R004600130010-2

Declassified in Part - Sanitized Copy Approved for Release @ 50-Yr 2014/05/14 : CIA-RDP81-01043R004600130010-2

1	2	3	4	5	6
61	Шланг	670М14-355	шт.	1	1
62	-"-	670М16-220	"	2	1
63	-"-	657М16-475	"	4	1
64	Хомутик	Ш6100-26-1,2	"	2	2
65	-"-	Ш6100-25-1,2	"	2	2
66	Пояс	Ш6101-200-7	"	4	1
67	Фильтр маслобака .	Ш6204-50	"	1	1
68	-"-	Ш6102-3	"	1	1
69	Кран сливной	219А12	"	1	2
70	Болт	Ш6202-1	"	2	2
71	Прокладка	Ш6204-160	"	2	2
72	Крышка	Ш6204-159	"	1	2
73	Лента резиновая	Ш6204-0-5	"	1	2
73а	-"-	-"- 6	"	1	2
74	Зажим	Ш6500-1	"	2	2
75	Болт	12М5с5-10	"	12	2
76	Амортизатор	Ш6400-05	"	16	2
77	-"-	Ш6400-51	"	16	2
78	Кольцо	Ш6400-12	"	9	2
79	Амортизатор	Ш6400-22	"	2	2
80	Болт	Ш6400-02	"	4	2
81	Гайка	М12М12	"	12	2
82	Кронштейн	Ш6701-98	"	1	1

Declassified in Part - Sanitized Copy Approved for Release @ 50-Yr 2014/05/14 : CIA-RDP81-01043R004600130010-2

Declassified in Part - Sanitized Copy Approved for Release @ 50-Yr 2014/05/14 : CIA-RDP81-01043R004600130010-2

1	2	3	4	5	6
82	Втулка	6800-211-1	шт.	4	2
84	Втулка	6800-211-2	"	8	2
85	Амортизатор	Ш6802-27	"	1	2
86	Втулка	Ш6802-47	"	4	2
87	Уплотнительное кольцо.	57А10	"	1	2
88	Конусное кольцо.	59А10	"	1	2
89	Ш а й б а	В28А18-24	"	7	2
90	Кол винта	Ш6912-150	"	1	Упаковка 6-ящ. № 3
91	Окантовка маслорадиатора резиновая.	А6905-151-10	"	1	2 в=950
92	Профиль резиновый.	Ш6907-25-12-2	шт.	2	1
93	Б о л т	Ш6900-5	шт.	4	2
94	Штифт	Ш6900-10	"	4	2
95	Пружина	1291х0,8-8-15	"	4	2
96	Амортизатор	Ш6907-15	"	18	2
97	Гибкий шланг	Ш6802-6	"	2	1
98	Х о м у т	40пф1	"	1	2
99	Перемычка	Ш7104-24	"	15	2
100	Кран аварийн. дет.	КН-50	"	1	2
101	Амортизатор	Ш6909-158	"	2	2
102	"	Ш6909-150	"	2	2
103	Х о м у т	42пф1	"	2	2
104	Вилка [illegible]	Ш4201-40	"	2	2

Declassified in Part - Sanitized Copy Approved for Release @ 50-Yr 2014/05/14 : CIA-RDP81-01043R004600130010-2

Declassified in Part - Sanitized Copy Approved for Release @ 50-Yr 2014/05/14 : CIA-RDP81-01043R004600130010-2

1	2	3	4	5	6
105	Резиновая прокладка.	А5801-10-1,2/2	шт.	2	2
106	Резиновая трубка	Ш6909-61-5	"	1	2
107	Б о л т	1201с5-14	"	20	2
108	Гайка	1400с5	"	24	2
109	Б о л т	1204с5-14	"	6	2
110	Болт	1204с6-22	"	8	2
111	-"-	1207с4-14	"	6	2
112	-"-	1204с5-12	"	1	2
113	Гайка	1406с6	"	41	2
114	Б о л т	1205с12-44	"	4	2
115	Гайка	1411с12	"	4	2
116	Б о л т	1207с5-22	"	6	2
117	Гайка	1411с5	"	8	2
118	Болт	Ш5800-62	"	2	2
119	-"-	1212с6-24	"	15	2
120	-"-	1212с6-28	"	2	2
121	-"-	1215с4-10	"	8	2
122	Г а й к а	1400с4	"	29	2
123	Б о л т	1215с5-20	"	5	2
124	-"-	1215с5-12	"	20	2
125	-"-	1215с4-12	"	15	2

Declassified in Part - Sanitized Copy Approved for Release @ 50-Yr 2014/05/14 : CIA-RDP81-01043R004600130010-2

Declassified in Part - Sanitized Copy Approved for Release @ 50-Yr 2014/05/14 : CIA-RDP81-01043R004600130010-2

1	2	3	4	5	6
126	Б о л т	1514с6-24	шт.	14	2
127.	Анкерная гайка	968А30-6	"	10	2
128.	Винт бензопроводов	1847е5-14	"	75	2
129.	-"-	1847е5-16	"	75	2
130.	Б о л т	1478с6-14-1	"	2	2
131.	Тяжик стальной	Ø 5 мм.	"	2	2
132.	Винт с пружиной и пистоном	1[illegible]4с-1[illegible]	"	10	2
133.	Винт -"-	1[illegible]4с10-14	"	2	2
134.	-"- -"-	1[illegible]4с10-16	"	5	2
135.	-"- -"-	1[illegible]4с10-19	"	20	2
136.	Штауфер	[illegible]А	"	4	2
137.	Проволока КО	Ø 0,5	кг.	0,3	2
138.	-"-	Ø 1,0	"	0,4	2
139	Т р о с	М5000-41-1,2	шт.	2	2
140	-"-	М[illegible]-42-1,2	шт.	2	2
141.	Трос управления Р-7 с тендерами /7х7х1,2/	6519-0 н/с е=2500	"	2	2
142.	Сережка с тросом	М5119-23-1,2	"	2	2
143.	Кажрен	М6801-191	"	1	Установлен на самолете
144	Заслонка	М6801-192	"	1	2

Declassified in Part - Sanitized Copy Approved for Release @ 50-Yr 2014/05/14 : CIA-RDP81-01043R004600130010-2

Declassified in Part - Sanitized Copy Approved for Release @ 50-Yr 2014/05/14 : CIA-RDP81-01043R004600130010-2

1	2	3	4	5	6
145	Гайка	1400с10	шт.	1	2
146	Дюритовый шланг	309сн6	"	1	$^1/_8$=250мм.
147	-"-	309сн27	"	1	$^1/_8$=500мм
148	-"-	309сн4	"	1	$^1/_8$=1000мм
149	Заклепка	851А8-9	кг	0,045	2
150	-"-	851А2,5-10	"	0,025	2
151	-"-	851А4-11	"	0,055	2
152	-"-	851А4-14	"	0,015	2
153	-"-	854А2-10	"	0,010	2
154	-"-	854А4-10	"	0,004	2
155	-"-	859А2,6-6	"	0,014	2
156	-"-	859А2-10	"	0,025	2
157	-"-	859А2,5-9	"	0,010	2
158	-"-	854А4-12	"	0,010	2
159	-"-	862А2,6-10	"	0,020	2
160	-"-	862А2-10	"	0,035	2
161	-"-	862А2,5-7	"	0,005	2
162	-"-	862А4-12	"	0,004	2
163	-"-	866А2,6-7	"	0,050	2
164	-"-	866А2-10	"	0,130	2
165	-"-	866А2,5-8	"	0,006	2
166	-"-	866А4-13	"	0,007	2
167	-"-	871А2-9	"	0,020	2

Declassified in Part - Sanitized Copy Approved for Release @ 50-Yr 2014/05/14 : CIA-RDP81-01043R004600130010-2

Declassified in Part - Sanitized Copy Approved for Release @ 50-Yr 2014/05/14 : CIA-RDP81-01043R004600130010-2

1	2	3	4	5	6
168.	Пломбир	ГОСТ897-41 5 -60	кг.	0,1	2
169.	-"-	-"-2,5-30	"	0,05	2
170.	-"-	-"-1,5-15	"	0,05	2
171.	-"-	-"-0-20	"	0,04	2
172.	-"-	-"-1-12	"	0,03	2
173.	-"-	-"-1,5-8	"	0,03	2
174.	-"-	-"- 1,5-10	"	0,03	2
175.	Коуш	57с4,5	"	8	2
176.	-"-	57с5,5	"	4	2
177.	Зарикоподшипник	1006-ОСТ3266	"	8	2
178.	Зандер	П5110-41	"	4	2
179.	Замок заделки тросов.	81сн1,5	"	2	2
180.	Шайба к пакету секторов	Ш7005-38	"	1	2
181.	Шайба к пакету секторов	Ш7005-39	"	1	2
182.	-"-	Ш7005-40	"	7	2
183.	-"-	Ш7005-41	"	2	2
184.	-"-	Ш7005-42	"	4	2
185.	-"-	А7005-273-1	"	2	2

Declassified in Part - Sanitized Copy Approved for Release @ 50-Yr 2014/05/14 : CIA-RDP81-01043R004600130010-2

Declassified in Part - Sanitized Copy Approved for Release @ 50-Yr 2014/05/14 : CIA-RDP81-01043R004600130010-2

1	2	3	4	5	6
186	Трос заземления.	7104-12	шт.	1	1
187	Подшипник	Ш06	"	4	2
188	Гайка	Ш6912-166	"	12	2
189	Болт	Ш6912-152	"	6	2
190	Гайка	Ш6912-152	"	6	2
191	Шайба	Ш6912-154	"	24	2
192	Шплинт	8х25	"	12	2
193	Крышка люка АРК-5 с петлей и замком.	Ш0101-112-1	"	1	1
194	Уголок собранный.	Ш0209-0-9	"	1	1
	ЗАПАСНЫЕ ЧАСТИ И ИНСТРУМЕНТ К ГОТОВЫМ ИЗДЕЛИЯМ.				
195	Запчасти и монтаж. инструмент зинтв.	По упаковоч-ному списку.	к-т	1	2 Упаковк. в бумагу.
196	Щетка к электромеханному УР7-М.	СБ8	шт.	4	2
197	Регулятор.	РУ-Е	"	1	2
198	Запчасти к переключат. ПМ-1.	По комплект. ведомости.	к-т	1	2
199	Запчасти к бензонасосу БПК-4.	-"-	"	1	1
200	Запчасти к изделию "КЛЕН"	По формуляру	"	1	1
201	Запчасти к ручному насосу РНА-1а.	По комплект. ведомости.	"	1	2
202	Запчасти и инструмент к изделию "КРИСТАЛЛ" и РУ-11АМ.	-"-	"	1	1
203	Запчасти к колесам 800 х 260.	-"-	"	1	1
204	Запчасти к колесу 470 х 210.	-"-	"	1	1
205	Приемник термопары к прибору ТПТ-19.	-"-	шт.	1	2

Declassified in Part - Sanitized Copy Approved for Release @ 50-Yr 2014/05/14 : CIA-RDP81-01043R004600130010-2

Declassified in Part - Sanitized Copy Approved for Release @ 50-Yr 2014/05/14 : CIA-RDP81-01043R004600130010-2

1	2	3	4	5	6
206	Диамагнитная отвертка и лампочка 25в. 0,15А. к компасу КИ-12.	По комплект. ведомости. -"-	шт. "	1 2	2 2
207	Спец.ключ к УВП-47 и к УПЗ-48	09-520-10	"	2	2
208	Запчасти к РВЗ-45.		к-т	1	2
209	Запасные части к РСБ-5	По комплект. ведомости.	"	1	1
210	Запасные части к изделию АРК-5.	-"-	"	1	1
211	Запчасти к изделию МРП-48	-"-	"	1	1
212	Запасные части к изделию СПУ-5.	-"-	"	1	1
213	Гибкий валик ТЗ-45.		шт.	1	1
214	Лампы фар 24 V 220 W		"	2	1
215	Запчасти к ПАГ-1Ф	ПАГ-1Ф	к-т	1	2
216	Запасные части к изделию 08		"	1	1
217	Запасные части к изделию МА-250.		"	1	2
218	Вилка к переносной лампе.		шт.	2	2
219	Запасные части к изделию МА-100.		к-т	1	2
220	Запчасти к изделию 12А-30	По паспорту	"	1	2
221	Шланг подзарядки амортстойки масей, кастыля, колёс и бортового баллона.	А5802-1	шт.	1	2 По списку пеленгационного оборудования.
222	Прибор для проверки давления в шинах масся кастыля с 2-мя манометрами.	63740/028	к-т	1	2 -"-
223	Переносная лампа на шнуре.	ПШ-26	шт.	1	1 -"-

Declassified in Part - Sanitized Copy Approved for Release @ 50-Yr 2014/05/14 : CIA-RDP81-01043R004600130010-2

Declassified in Part - Sanitized Copy Approved for Release @ 50-Yr 2014/05/14 : CIA-RDP81-01043R004600130010-2

1	2	3	4	5	6
224	Кабель аэродромного электропитания.	7208-241	шт.	1	На 2 стыка наземного оборудования.
225	Прокладка к бензомеру.		"	10	2
226	Компрессор	АК-50М	"	1	2
227	Прокладка фильтра.	820А1	"	2	2
228	Шланг кислородных масок.	КШ-10	"	2	1
229	Прокладка О-10 к ВК-44		"	4	2
230	Прокладка О-5 к ВК-44		"	2	2
231	Запчасти к мотору УТ-6Д		"	3	2
232	Запчасти к СНП		к-т	1	2
233	Винт к ЭМИ-ЭК и ТУ2-48.	ГОСТ 1477-42 3х5	шт.	4	2
234	Кислородная маска	КМ-18	шт.	2	1
235	Пластинка	6912-150-3	шт.	3	2
236	Заклепка	2015а3х12	шт.	3	2
237	Запчасти к изделию 07		к-т	1	1

Представитель завода

Declassified in Part - Sanitized Copy Approved for Release @ 50-Yr 2014/05/14 : CIA-RDP81-01043R004600130010-2

Declassified in Part - Sanitized Copy Approved for Release @ 50-Yr 2014/05/14 : CIA-RDP81-01043R004600130010-2

П Е Р Е Ч Е Н Ь

Наземно-эксплоатационного оборудования к самолету АН-2 № 16709

№ пп	Наименование	№-№ чертежей	Ед. изм.	Количч.	Примечание:
1	2	3	4	5	6
	I. ЧЕХЛЫ.				
1	Чехол на РВ-2.	А7108-23	шт.	1	
2	Летний чехол капота.	ЭШ-15	"	1	
3	Зимний чехол капота.	ЭШ-14	"	1	
4	Чехол на воздушн.винт	ЭШ-4; ЭШ-5	к-т	1	
5	Чехлы на колеса.	ЭШ-1	шт.	2	
6	Чехол зимний на масло-радиатор.	А6204-134	"	1	
7	Чехол на трубку "ПИТО"	ЭШ-2	"	1	
8	Чехол на Р-7Е.	А6500-181	"	1	
9	Подушка туннели масло-радиатора.	А6905-200	"	1	
10	Чехол на РСБ-5.	7108-40	"	1	
11	Чехол на втулку винта.	А6912-170	"	1	
12	Чехол на термометр наружного воздуха.	ЭШ-3	"	1	
13	Чехол фонаря.	ЭШ-16	"	1	
	II. АЭРОДРОМНОЕ ОБОРУДОВАНИЕ.				
14	Ведро для масла.	62740/096	шт.	1	
15	Ведро для бензина.	62740/089	"	1	
16	Воронки для бензина.	62740/100А	"	1	

Declassified in Part - Sanitized Copy Approved for Release @ 50-Yr 2014/05/14 : CIA-RDP81-01043R004600130010-2

Declassified in Part - Sanitized Copy Approved for Release @ 50-Yr 2014/05/14 : CIA-RDP81-01043R004600130010-2

1	2	3	4	5	6
17	Воронка для антиобледенительной жидкости.	62740/098	шт.	1	
18	Шланг подзарядки стойки шасси, стойки костыля, тормозных и костыльного колес и баллонов.	А5802-1	"	1	
19	Трубы подогрева мотора.	А6911-101	"	1	
20	Прибор для проверки давления в стойках шасси и костыля.	62740/028	"	1	
21	Приспособление для крепления предкрылков на стоянке.	Ш2600-36	"	1	
22	Стопор кабинный.	Ш5101-21	"	1	
23	Стопор штормовой.	Ш2500-112	к-т	1	
24	Стопор штормовой.	Ш2216-126	шт	1	
25	Трап-настил.	62740/088	"	2	
26	Переносная лампа со шнуром.	ПЛ-36	"	1	
27	Кабель аэродромного электропитания.	Ш7208-241	"	1	
28	Направляющая вилка костыльного колеса.	62740/087Б	"	1	Красному самолету вилка не прилагается №№ 28, 29, 30, 31, 33
29	Трос для буксирования самолета.	241-15	"	1	
30	Козелок под хвостовую часть.	62740/017Б	"	1	
31	Козелок под фюзеляж.	62740/016В	"	2	
32	Колодки тормозные под колеса.	62740/099В	"	2	
33	Ключи [illegible] дверей кабины пилота.	Ш0105-20	"	2	
34	Ключи от дверей самолета.	[illegible]-57	"	2	
35	Подушки сидения.	Ш0104-70	"	2	
36	Шланг для заправки [illegible] системы от [illegible].	Ш5106-20	"	1	
37	Сигнал для проверки [illegible] [illegible].	62500/069	"	1	

Declassified in Part - Sanitized Copy Approved for Release @ 50-Yr 2014/05/14 : CIA-RDP81-01043R004600130010-2

Declassified in Part - Sanitized Copy Approved for Release @ 50-Yr 2014/05/14 : CIA-RDP81-01043R004600130010-2

1	2	3	4	5	6
38	Складывающиеся стремянки.	63740/261	шт.	1	
39	Трос для швартовки с-та на земле.	63880/016	к-т	1	
40	Бидон для противообледенительной жидкости.	63700/002А	шт.	1	
41	С е т к а .	Ш0422-65	"	1	
42	Трос для швартовки грузов	Ш0422-70	"	9	
43	Ш т о р а.	Ш0430-70	"	1	
44	Д о м к р а т.	Ш9500-0	"	1	
45	Запчасти к мотору АШ-62ИР		к-т	1	Инструкционный комплект № 4
46	Бортсумка с инструментом к мотору АШ-62ИР		шт	1	Нач. Дк 19
47.	Колодки	0422-85	-"-	4.	

Примечание: Детали позиций № № 18, 20, 26 и 27 упакованы в ящике одиночного комплекта. №№ 1, 2

ПРЕДСТАВИТЕЛЬ ЗАВОДА

Declassified in Part - Sanitized Copy Approved for Release @ 50-Yr 2014/05/14 : CIA-RDP81-01043R004600130010-2

Declassified in Part - Sanitized Copy Approved for Release @ 50-Yr 2014/05/14 : CIA-RDP81-01043R004600130010-2

С П И С О К

Бортового инструмента машины № 16709

№ пп.	Наименование инструмента и его размер.	№ чертежа инструмента.	Количество.	Примечание:
1	2	3	4	5
1	Сумка для инструмента.	64650/058А	1	
2	Плоскогубцы комбиниров.	200 ОСТ/НКТМ 6597-39	1	
3	Круглогубцы.	175 ОСТ/НКТМ 6595-39	1	
4	К у с а ч к и.	175 ОСТ/НКТМ 6596-39	1	
5	Ключ разводной № 2.	30 ОСТ/НКТМ 6816-39	1	
6	Молоток на 400г. с ручкой 54636/005 и клином 54652/103.	54200/006	1	
7	Отвертка 150 мм.	5 ОСТ/НКТМ 3592-39	1	
8	Отвертка 250 мм.	64650/024	1	
9	Спец. отвертка для замков "Лаус".	64616/001	1	
10	Напильник 2 грен. личной [illegible] с ручкой.	20171-40	1	
11	Напильник [illegible] личный [illegible] с ручкой.	20171-40	1	
12	Напильник [illegible] личн. [illegible] с ручкой.	20168-40	1	

Declassified in Part - Sanitized Copy Approved for Release @ 50-Yr 2014/05/14 : CIA-RDP81-01043R004600130010-2

Declassified in Part - Sanitized Copy Approved for Release @ 50-Yr 2014/05/14 : CIA-RDP81-01043R004600130010-2

1	2	3	4	5
13	Нож складной армейский /6-ти предметный/.	Готовое изделие.	1	
14	Ключ для замены цилиндра мотора с шаровым наконечником.	69740/027	1	
15	Таратынка	64650/016	1	
16	Щуп /0,05÷1 мм./ набор из 12 пластин.	№ 5 готовое изделие.	1	
17	Шило для замятия тросов.	64650/017	1	
18	Зубило сменное с=150мм.	64200/002	1	
19	Керн с=125 мм.	64200/005	1	
20	Бородок с=120 мм.	64200/004	1	
21	Шпиндрель	64650/018	1	
22	Ключ для лент-расчалок.	64400/050А	2	
23	Выколотка Ø8;10;12;14мм.	64900/007	4	
24	Выколотка Ø16 мм.	64900/006	1	
25	Ключ для гайки колеса насос =75 мм.	64400/010	1	
26	Насос для пневматиков.	64650/014	1	
27	Ключ гаечный 2-х сторонний 5x7	64400/001	1	
28	-"- 7x9	64400/002	1	
29	-"- 9x11	64400/003	1	
30	-"- 11x14	64400/004	1	
31	-"- 14x17	[illegible]	1	
32	-"- 17x19	[illegible]	1	
33	-"- [illegible]	[illegible]	1	
34	-"- [illegible]x27	[illegible]	1	
35	-"- 27x30	[illegible]	1	

Declassified in Part - Sanitized Copy Approved for Release @ 50-Yr 2014/05/14 : CIA-RDP81-01043R004600130010-2

Declassified in Part - Sanitized Copy Approved for Release @ 50-Yr 2014/05/14 : CIA-RDP81-01043R004600130010-2

1	2	3	4	5
13	Бак ежедневн запасный /6-ти предметный/.	Готовое изделие.	1	
14	Кронц для зажимки цилиндров мотора с шаровыми шарнирными.	63740/027	1	
15	Тавотница	64650/016	1	
16	Щуп /0.05÷1 мм./ набор из 12 пластин.	В 5 готовые изделия.	1	
17	Шайба для вальцетки трасов.	64650/017	1	
18	Рубаха сварная с-150мм.	64200/002	1	
19	Керн с-125 мм.	64200/005	1	
20	Бородок с-120 мм.	64200/004	1	
21	Шпилькодер	64650/018	1	
22	Ключ для лент-расчалок.	64400/050А	2	
23	Выколотка Ø8;10;12;14мм.	64200/007	4	
24	Выколотка Ø16 мм.	64200/006	1	
25	Ключ для гайки колеса насос с-75 мм.	64400/010	1	
26	Насос для пневматиков.	64650/014	1	
27	Ключ гаечный 2-х сторонний 5x7	64400/001	1	
28	-"- 7x9	64400/002	1	
29	-"- 9x11	64400/003	1	
30	-"- 11x14	64400/005	1	
31	-"- 14x17	64400/006	1	
32	-"- 17x19	64400/004	1	
33	-"- 19x22	64400/008	1	
34	-"- 24x27	64400/007	1	
35	-"- 27x30	64400/009	1	

Declassified in Part - Sanitized Copy Approved for Release @ 50-Yr 2014/05/14 : CIA-RDP81-01043R004600130010-2

Declassified in Part - Sanitized Copy Approved for Release @ 50-Yr 2014/05/14 : CIA-RDP81-01043R004600130010-2

1	2	3	4	5
36	Ключ рожковый двусторонний 32х36	64400/013	1	
37	Сменные головки к торцевым ключам -5;7;9	54425-18 / 291;292;295	3	
37а	Вороток ключей для сменных головок.	54425-12 / 272;276;278	2	
38	Сменные головки -11;14;17;19.	54425-18 / 296; 457; 402; 403	4	
39	Ключ торцовый для гаек стыкоп.болтов крыла.	64400/019	1	
40	Ключ для заливки углекислоты.	ЗШ-66-11	1	
41	Тиски ручные.	125 ОСТ/НКТМ 6592-39	1	
42	Дрель ручная со сверлами Ø2; 2,5; 3; 3,5; 4; 5.	ПР-492	1	На 1 шт.каждого размера.
43	Ножовка /станок и два полотна/.	64650/022	1	
44	Пистолет	54222/001	1	
45	Приспособление для съема шлангов.	64910/032	1	
46	Ключ гайки маслорадиатора.	64400/026	1	
47	Ножницы прямые кровельные.	619100/022	1	
48	Ключ для [illegible]	[illegible]	1	
49	Ключ [illegible]	[illegible]	1	

Declassified in Part - Sanitized Copy Approved for Release @ 50-Yr 2014/05/14 : CIA-RDP81-01043R004600130010-2

Declassified in Part - Sanitized Copy Approved for Release @ 50-Yr 2014/05/14 : CIA-RDP81-01043R004600130010-2

1	2	3	4	5
50	Ключ для оси костыля 4201-96, -08.	64400/044	2	
51	-"-4101-8 -"-	64400/045	1	
52	-"-4202-2 -"-	64400/046	1	
53	-"-4101-2 -"-	64400/047	1	
54	Ключ гаечный двухсторонний хромированный 5x7	64400/001	1	
55	-"- 9x11	64400/002	1	
56	-"- 14x17	64400/004	1	
57	-"- 19x22	64400/009	1	
58	-"- 24x27	64400/007	1	
59	Паяльник электрический на 24 вольт.		1	
60	Ключ гаечный двухсторонний 19x22	54429-11 / 248	1	
61	Наконечники для болтов Ø 12; 14 и 20.	64650/063 064 065	1 1 1	
62	Сумка для ключей кислородного оборудования.	64650/040	1	

ПРЕДСТАВИТЕЛЬ ЗАВОДА

Declassified in Part - Sanitized Copy Approved for Release @ 50-Yr 2014/05/14 : CIA-RDP81-01043R004600130010-2

Declassified in Part - Sanitized Copy Approved for Release @ 50-Yr 2014/05/14 : CIA-RDP81-01043R004600130010-2

Declassified in Part - Sanitized Copy Approved for Release @ 50-Yr 2014/05/14 : CIA-RDP81-01043R004600130010-2

Declassified in Part - Sanitized Copy Approved for Release @ 50-Yr 2014/05/14 : CIA-RDP81-01043R004600130010-2

ПЕРЕЧНИ

Одиночного комплекта запасных частей наземного эксплоатационного оборудования бортового инструмента к самолету АН-2

Declassified in Part - Sanitized Copy Approved for Release @ 50-Yr 2014/05/14 : CIA-RDP81-01043R004600130010-2

Declassified in Part - Sanitized Copy Approved for Release @ 50-Yr 2014/05/14 : CIA-RDP81-01043R004600130010-2

RADIO COMPASS AND TO-FROM INDICATOR

TYPE РПКО-10М

Brief Description
and Operating Instructions

Declassified in Part - Sanitized Copy Approved for Release @ 50-Yr 2014/05/14 : CIA-RDP81-01043R004600130010-2

Declassified in Part - Sanitized Copy Approved for Release @ 50-Yr 2014/05/14 : CIA-RDP81-01043R004600130010-2

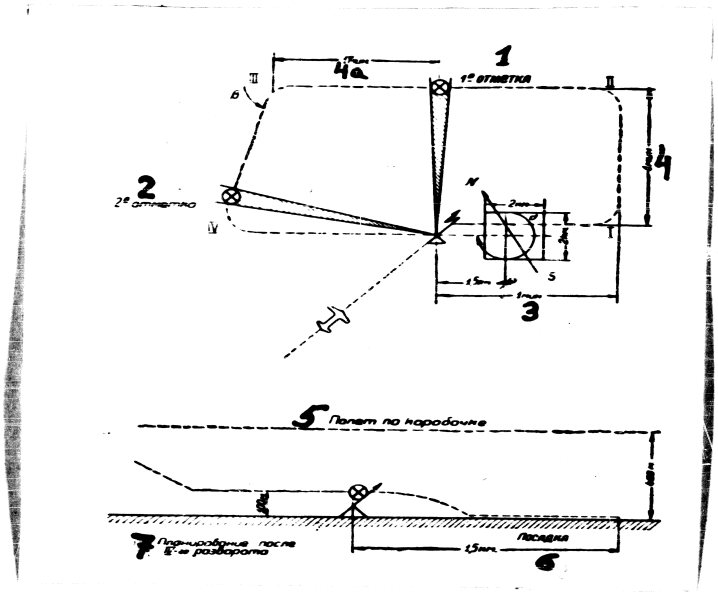

Fig.5

1 - First passing indication; 2 - Second passing indication; 3 - One minute; 4 - One minute; 4a) - One minute; 5 - Supplementary approach; 6 - Landing; 7 - Glide after fourth turn; Symbols: α - Landing course angle; I,II,III,IV - Turning points; β - III turning angle = 80°; ⊗ - Radio station cross beam record; ↗ - Homing radio station.

If the tumbler is at РПК (RC) when the radio station is passed, the pointer swings sharply to the right or left of zero and in most cases returns to zero when the radio station is behind. If the tumbler is at РО (TF1) at this moment, the pointer swings over from its extreme left to its extreme right position on the scale.

Declassified in Part - Sanitized Copy Approved for Release @ 50-Yr 2014/05/14 : CIA-RDP81-01043R004600130010-2

Declassified in Part - Sanitized Copy Approved for Release @ 50-Yr 2014/05/14 : CIA-RDP81-01043R004600130010-2

b) Change over to landing run.

As soon as the moment of flight over the radio station is recorded the RC-TFI tumbler is set to PO (TFI) and the plane changes its course by the magnetic compass to the commanded landing course with a descent to 400 m.

After flying this course for 1 minute, turn about through 90°. Turning may be done in either direction, if the latter has not been commanded. The course indicator pointer should point to the right. Fly the course for 1 minute after the first turn and then make a second 90° turning (the pointer will swing over to the left) and put the plane on a course opposite to the landing run (by the magnetic compass). Fly this course till the TFI shows the radio station is abeam (the pointer swings right), after which follow the same course for 1 minute and make a third turning through 80°. Follow the same course till the pointer begins left-right movement again, indicating the radio station traverse. At this moment switch the tumbler from PO (TFI) to PПK (RC), flying to the station so that the magnetic compass shows the landing course.

Having checked that the approach is correct, glide down to the height commanded for passing over the station (100 m). After that switch the tumbler over to PO (TFI) and maintain the course by the magnetic compass, occasionally checking the direction to the station by the RC. Fly thus till passing is recorded, after which start landing. If the landing change-over has not come out correct, return and begin a new circuit.

The change-over to landing is accomplished at a height of 400 m. Horizontal and vertical speed during change--over and gliding are specified separately for each type of aircraft.

Declassified in Part - Sanitized Copy Approved for Release @ 50-Yr 2014/05/14 : CIA-RDP81-01043R004600130010-2

Declassified in Part - Sanitized Copy Approved for Release @ 50-Yr 2014/05/14 : CIA-RDP81-01043R004600130010-2

The described procedure of landing change-over is outlined roughly and in each separate case must be modified by flight personnel.

The diagram of instrument landing change-over, aided by РПКС-10М, magnetic compass and stop-watch is shown in Fig.5.

c) Beacon flying.

1. When flying by a beacon with directional or non-directional transmission do the following:

Set the duty selector at:

a) ПМ if the beacon transmits modulated signals;

b) МН if the beacon signals are non-modulated.

2. Trim the RC-IF₁ tuning.

3. Fly the plane according to the special instructions on the use of beacons with directional and non-directional transmission. When flying by directional beacons use the manual volume control. Begin volume adjustment with aural minimum, gradually increasing it by the volume control to a position producing distinct reception, so that the change of signal strength should be clearly defined when the plane deviates from the beam.

§ 13. Schedule Inspection

After every 50 hours of operation, but not less than once in three months, the radio compass should be carefully examined by a radio engineer. The inspection should be carried out in compliance with the acting maintenance schedule. In addition, the operation of separate units is tested as outlined above.

The following controls are lubricated regularly: receiver tuning vernier, flexible shaft and remote tuning control mechanism. Oiling is done with antifreeze lubricant ГОН-54.

Declassified in Part - Sanitized Copy Approved for Release @ 50-Yr 2014/05/14 : CIA-RDP81-01043R004600130010-2

Declassified in Part - Sanitized Copy Approved for Release @ 50-Yr 2014/05/14 : CIA-RDP81-01043R004600130010-2

other lubricants may lead to freezing and failure of controls at temperatures below zero. Oiling should be done neatly. To avoid throwing the controls out of adjustment and retiring their smooth functioning, do not touch the screws at the bottom of the remote tuning mechanism.

To ensure reliable operation of the rotary convertor, inspect it regularly for the condition of the wearing parts -- brushes, commutators, brush-holders.

The low and high voltage brushes are considered worn down when their remaining height is less than 9 mm. After replacement the brushes must be carefully lapped to the commutator with mark 00 fine glass paper. Do not use sand paper for lapping. After brush lapping, blow the brush dust out of the convertor. Dirty commutators should be wiped off with a clean rag dipped in petrol. Pitted spots and dirt still remaining on the commutator after this are cleaned off with mark 000 glass paper.

Wrap the glass paper around a stick or fibre to do this job.

The rotary convertor should be regularly cleaned from brush dust to prevent discharges and short-circuiting through the dust at the high-voltage side. Air-blast the convertor after every 100 hours of operation with hand bellows or another device.

If the convertor is operating continuously oil its bearings with antifreeze grease mark ГОА on sperm whale blubber not less than once per annum. The quantity of oil is sufficient if it fills the bearings flush with the balls. Before greasing the bearings wash off old grease with pure petrol.

In this case convertor assembly and dismantling should comply with the plant maintenance instructions.

Declassified in Part - Sanitized Copy Approved for Release @ 50-Yr 2014/05/14 : CIA-RDP81-01043R004600130010-2

Declassified in Part - Sanitized Copy Approved for Release @ 50-Yr 2014/05/14 : CIA-RDP81-01043R004600130010-2

14. Storage and Slushing

Slushing consists of covering with protective grease the outer steel parts devoid of rust-proof coating.

This purpose is served by petrolatum or gun-grease.

The following parts require slushing: flexible shaft, plug and branch pipe threading, cables, threaded sleeves of remote control and vernier, rotary convertor, remote control and receiver vernier.

Before slushing remove dirt and grease from the parts with a rag dipped in pure petrol. After that the parts are dried with dry compressed air or wiped clean with dry clean rags.

NOTE:

The parts to be slushed may be touched only after washing the hands in petrol and covering them with gun grease.

Prior to slushing, the grease is heated to 70-75°C.

Cover the parts with a smooth coat of grease applied with a brush or by dipping them in heated grease. On detecting corrosion, remove it with 000 glass paper dipped in gun-grease, then polish the parts with ГОИ paste.

Type РПКО-10М radio compasses should be kept in dry warm premises on wooden racks without packing.

The store house should be protected against penetration of corrosive gases and vapours.

After every 4-5 months of storage inspect the equipment and, if necessary, renew the lubricant, entering the operation in the log-book.

When taking the equipment out of storage, remove the grease with a cloth dipped in petrol. After that wipe off the

Declassified in Part - Sanitized Copy Approved for Release @ 50-Yr 2014/05/14 : CIA-RDP81-01043R004600130010-2

Declassified in Part - Sanitized Copy Approved for Release @ 50-Yr 2014/05/14 : CIA-RDP81-01043R004600130010-2

cleaned place with a dry clean cloth to remove all traces of petrol. This process should be carried out carefully so as not to drop petrol on rubber parts.

§ 15. Winter Maintenance

Under winter operating conditions, wash the lubricated parts of the vernier and remote control with pure petrol and then lubricate them with special antifreeze grease, when placing the equipment in service.

§ 16. Guaranty

Unfailing operation of type РПКО-10М radio compass and to - from indicator is guaranteed under service conditions for 14 months from the moment of acceptance and 10 month's storage at the user's dumps. During the first 18 months the device will retain all its ratings. After this period and until the end of the guaranty, the following effects are allowed:

1. Reduction of receiver sensitivity down to 20 microvolts.

2. Reduction of angular sensitivity down to 40°.

3. Replacement of type 271С 2-6 shock-absorbers, the shock-absorber under the tuning indicator and the rubber gaskets in the receiver and control panel.

4. Flexible shaft require regular oiling in service. Failure of vacuum devices during the guaranty period not owing to manufacturing faults is not a pertext for returning the equipment to the plant. In this case the user draws up a statement against which the faulty vacuum devices are replaced.

The plant ensures the operation of the equipment for the remaining guaranty period by replacing the defective vacuum devices free of charge, sending its representatives to the user

Declassified in Part - Sanitized Copy Approved for Release @ 50-Yr 2014/05/14 : CIA-RDP81-01043R004600130010-2

Declassified in Part - Sanitized Copy Approved for Release @ 50-Yr 2014/05/14 : CIA-RDP81-01043R004600130010-2

within 10 days of receiving the statement. The plant guarantees for the course indicator, rotary convertor and tuning indicator are stated in the respective log-books.

Declassified in Part - Sanitized Copy Approved for Release @ 50-Yr 2014/05/14 : CIA-RDP81-01043R004600130010-2

Declassified in Part - Sanitized Copy Approved for Release @ 50-Yr 2014/05/14 : CIA-RDP81-01043R004600130010-2

2. TROUBLES AND REMEDIES

Trouble	Cause	Remedy
1. One minute after switching on the RC, with the PУ-11AM rotary convertor working, tuning indicator pointer does not deflect, receiver and compass do not operate.	a) Receiver valves 6K7 (46 and 90) out of commission. b) Burnt resistor 123 (300 ohms).	a) Take the RC out of casing, and replace valves 6K7 (46 and 90). b) Replace resistor 123.
2. After switching on the compass, tuning indicator pointer deflects, but no signal audible in headphones with duty selector at MM and MH.	One of the receiver valves out of commission.	Take RC out of casing and check valves one after another, touching their grids. If valve is sound, noise must be heard in earphones. Replace defective valves.
3. After switching on, tuning indicator pointer deflects only 1.5-2 divisions. With tuning handle "РЕГУЛЯТОР" turned all the way clockwise, receiver and compass do not operate.	a) Valve 6K7 (46 or 90) out of commission. b) Burnt resistor 102 (3.9 kilo--ohms).	a) Replace defective valve. b) Check resistor with ohmmeter; if burnt, replace with spare.
4. Frequent failure of valve 6A8 (53) - burnt filament.	Short-circuiting of wire-wound resistor 161 (65 ohms).	Repair or replace resistor 161.

Declassified in Part - Sanitized Copy Approved for Release @ 50-Yr 2014/05/14 : CIA-RDP81-01043R004600130010-2

Declassified in Part - Sanitized Copy Approved for Release @ 50-Y-2014/05/14 : CIA-RDP81-01043R004600130010-2

Trouble	Cause	Remedy
5. After switching on with duty selector at MM, noise heard in headphones, but RC does not tune over the whole range.	a) Breakage of aerial lead-in conductors or short-circuit between aerial and frame.	a) Find and repair break; eliminate short-circuit.
	b) Mixer valve 53 out of commission.	b) Take RC out of casing and replace valve 53.
6. In tuning to a radio station with the selector at MM, station signals heard normally, but in position MH local modulation tone not audible.	Valve 6A8 (70) out of commission.	Replace valve 6A8 (70).
7. In tuning to radio station with selector at MM or MH station signals audible, but with selector at K indicator pointer oscillates near zero but does not deflect to either side. With aerial deflected and tumbler at PMK or RC, the RC cannot be tuned to the homing station, i.e., slow rotation of remote tuning handle about the tuning frequency does not notably deflect the tuning indicator to the left.	a) Loop HF amplifier valve 6K7 (5) out of commission.	a) Replace valve 6K7 (5).
	b) Valve 6A8 (21 or 22) out of commission.	b) Replace valve 6A8 (21 or 22).
	c) No contact between slider and winding of adjustable balance resistor.	c) Take RC out of casing and restore contact.

Declassified in Part - Sanitized Copy Approved for Release @ 50-Y-2014/05/14 : CIA-RDP81-01043R004600130010-2

Declassified in Part - Sanitized Copy Approved for Release @ 50-Yr 2014/05/14 : CIA-RDP81-01043R004600130010-2

Trouble	Cause	Remedy
8. While tuning in positions MM and MH, station signal heard normally, but at K the left--right indicator stands at zero. With aerial cut off, selector at K and tumbler at PMK or PO, tuning possible. Rotating remote tuning crank notably deflects tuning indicator to the left. Rotating the balance resistor handle does not deflect course to - from indicator from zero.	a) LF push-pull heterodyne inoperative due to failure of valves 6A8 (21,22) in balanced modulator. b) Faulty contacts in duty selector. c) L-R course and T-F indicator ИКО-42 defective.	a) Replace valves 6A8 (21,22) in balanced modulator. b) Repair contacts or replace control panel. c) Replace indicator.
9. RC unbalanced course and to - - from indicator pointer, with aerial off, remains in extreme left or right positions and rotation of balance resistor shaft does not bring it to zero.	a) One of balanced modulator valves (21 or 22) out of commission. b) Cathode circuit of one of balanced modulator valves (21 or 22) short-circuited to frame. Possible cause of short-circuit -- one of cross wires running to balance resistor cut by frame.	a) Replace balanced modulator valves (21 or 22). b) Take RC out of case, straighten and shift cross wire away from front panel edge.

Declassified in Part - Sanitized Copy Approved for Release @ 50-Yr 2014/05/14 : CIA-RDP81-01043R004600130010-2

Trouble	Cause	Remedy
	This may be because the cross wire was shifted to the edge of the front panel when previously opening the RC.	
10. Normal operation of device occasionally upset.	Breaking of contact between valve pins and sockets in valve sockets.	Take device out of case and carefully rock the valves in their sockets. If valves do not sit securely in the sockets, pull the valves out and slightly bend in socket springs, being careful not to damage connecting wires.
11. At large distances from radio station, with selector at K and tumbler at PMK, angular sensitivity sharply asymmetric, e.g., when aircraft turns right the course indicator pointer sharply deflects from zero, but at left turns deflects feebly.	Unbalancing of RC.	Check the balance as outlined in these instructions.

Declassified in Part - Sanitized Copy Approved for Release @ SECRET 2014/05/14 : CIA-RDP81-01043R004600130010-2

Trouble	Cause	Remedy
12. Operating range of RC and indicator small, at large distances from radio station (when flying to station) course indicator pointer unstable in zero position.	a) Excessive interference in aircraft.	a) Check the following: 1. Lapping of brushes in aircraft generator type ГС-350, ГС-1000. 2. Burnt relay contacts in control distribution box (PPK). 3. Shielding of engine ignition system. 4. Quality of aircraft bonding.
	b) Excessive noise from PУ-11AM rotary convertor	b) Check PУ-11AM, lapping and pressure of brushes on commutator.
13. To- from indicator does not stop at zero even at slight tapping on the device.	Displaced correcting screw on the indicator.	Turn the correcting screw and correctly set the pointer.
14. When flying with the compass switched on, when swinging the plane or passing over a radio station (or near it), the indicator pointer changes its position by leaps or stops in some positions.	Compass needle jams in its bearings.	Slightly tap the compass during flight. After flight, replace it.

Declassified in Part - Sanitized Copy Approved for Release @ 50-Y-2014/05/14 : CIA-RDP81-01043R004600130010-2

Trouble	Cause	Remedy
15. Instrument operates only as radio compass. Signal lamp does not flash.	a) Tumbler out of commission.	a) Replace tumbler or cable running from receiver to rotary convertor as well as tumbler.
Switching the tumbler from PMK to PO does not change duty.	b) Relay out of commission.	b) Replace loop.

Declassified in Part - Sanitized Copy Approved for Release @ 50-Y-2014/05/14 : CIA-RDP81-01043R004600130010-2

Declassified in Part - Sanitized Copy Approved for Release @ 50-Y-2014/05/14 : CIA-RDP81-01043R004600130010-2

3. SPECIFICATIONS TO RADIO COMPASS TO - FROM INDICATOR DIAGRAM

No. in wiring diagram	Name	Type	Value	Tolerance
1	RC loop (РПК)	-	21 microhenry	-
2	Loop circuit inductance	1	945 microhenry	
3	Loop circuit section of four-section gang tuning condenser (adjustable)	-	15-500 pf	-
4	Loop circuit semi-adjustable capacitance	-	4-50 pf	-
5	Loop amplifier valve	6K7	-	-
6	Non-wire wound resistance of additional bias on control grids of balanced modulator is radio compass position	BC-0.25 W	1.0 kiloohm (560 Ω - 3,300 Ω) (1.0-6.8)	±10%
7	Non wire-wound resistance for control grid bias	BC-0.25 W	1 kiloohm	±10%
8	Non wire-wound resistance for adjusting operating condition of screen grid	BC-0.25 W	0.22 Megohms	±10%
9	Condenser for blocking bias resistor	KCO-2-500-A--1000-II	1,000 pf	±10%
10	Condenser for by-passing anode choke	КГК-1-Д-27-II	27 pf (0 - 82)	±10%
11	Dividing condenser	KCO-2-500-A--100-II	100 pf	±10%

Declassified in Part - Sanitized Copy Approved for Release @ 50-Y-2014/05/14 : CIA-RDP81-01043R004600130010-2

No. in wiring diagram	Name	Type	Value	Tolerance
12	Loop amplifier screen grid blocking condenser	KCO-3-500-A-4700-3	4700 pf	±20%
13	Balance modulator (BM) gridleak resistor (composition)	BC-0.25 W	1.5 Megohms	±20%
14	BM valve heterodyne gridleak resistor (composition)	BC-0.25 W	1.5 Megohms	±10%
15	Ditto	BC-0.25 W	1.5 Megohms	±10%
16	BM un-by-passed bias and balance resistor wire-wound adjustable	-	590 ohms	±5%
17	BM screen voltage divider resistor (composition)	BC-0.25 W	33 kiloohms (22-break)	±5%
18	Ditto	BC-0.25 W	33 t.ohms (22 break)	±5%
19	BM audio oscillator feedback resistor (composition)	BC-0.25 W	0.15 Megohms (0.1-0.56)	±10%
20	Ditto	BC-0.25 W	0.15 Megohms (0.1-0.56)	±10%
21	Balanced modulator valve	6A8	-	-
22	Ditto	6A8	-	-
23	BM audio oscillator feedback dividing condenser	SCC	0.04 mF	±20%
24	Ditto	SCC	0.04 mF	±20%
25	BM anode blocking condenser	MKB	0.25 mF	±20%
26	BM screen blocking condenser	SCC	0.04 mF	±20%

Declassified in Part - Sanitized Copy Approved for Release @ SO-Y-2014/05/14 : CIA-RDP81-01043R004600130010-2

No. in wiring diagram	Name	Type	Value	Tolerance
27	BM audio oscillator anode blocking condenser	KCO-5-500-A-4700-II	4,700 pf	±10%
28	Ditto	KCO-5-500-A-4700-II	4,700 pf	±10%
29	Loop amplifier HF anode choke	-	60 millihenry	±10%
30	BM audio oscillator anode supply resistor (composition)	BC-0.25 W	47 kiloohms	±10%
31	Ditto	BC-0.25 W	47 kiloohms	±10%
32	BM audio oscillator anode adjusting resistor (composition)	BC-0.25 W	22 kiloohms (0-56)	±10%
33	Composition resistor for by-passing course indicator fixed winding in order to reduce BM sound oscillator amplitude	BC-0.25 W	0.27 Megohms (0.051-0.3)	±10%
34	BM screen adjusting resistor (composition)	BC-0.5 W	0.27 Megohms (0.051-0.3)	±10%
35	BM anode circuit decoupling resistor (composition)	BC-0.25 W	33 kiloohms (10 - 56)	±10%
36	Automatic sensitivity (ASC-AP4) decoupling resistor (composition) of HF amplifier (AHF-9B4) control grid circuit	BC-0.25 W	0.1 Megohm	±20%
37	Aerial leakage resistor (composition)	BC-0.25 W	0.47 Megohms	±20%
38	Aerial circuit inductance	-	665 microhenry	-

Declassified in Part - Sanitized Copy Approved for Release @ SECRET 2014/05/14 : CIA-RDP81-01043R004600130010-2

No. in wiring diagram	Name	Type	Value	Tolerance
39	Condenser for coupling aerial with tuned circuit	KГK-1-M-27-II	27 pf (18-47)	±10%
40	Control grid decoupling condenser	БСС	0.04 mF	±20%
41	Aerial circuit section of four-section gang tuning condenser (adjustable)	-	15-500 pf	-
42	Aerial circuit semi-adjustable capacitance	-	4-50 pf	-
43	Rejector filter circuit negative IF feedback condenser	KCO-2-500-B-620-I and KCO-2-500-B-680-I	1300 pf or 2 condensers: 1-620 pf 2-680 pf in parallel	±5%
44	HF screen blocking condenser	БС	0.01 mF	±20%
45	Condenser for by-passing HF anode circuit coil (for tuning coupling circuit to frequency beyond receiver range)	KCO-2-500-A-300-I	300 pf	±5%
46	HF valve	6K7	-	-
47	IF inductance of rejector filter circuit	-	1500 microhenries	-
48	HF screen supply divider resistor (composition	BC-0.25 W	0.1 Megohms (0.056-0.33)	±10%
49	Ditto	BC-0.25 W	0.1 Megohms (0.056-0.33)	±10%

Declassified in Part - Sanitized Copy Approved for Release @ 50-Y-2014/05/14 : CIA-RDP81-01043R004600130010-2

No. in wiring diagram	Name	Type	Value	Tolerance
50	Frequency convertor (FC-Пр) control grid decoupling resistor (composition)	BC-0.25 W	0.1 Megohms	±20%
51	HF anode circuit coupling inductance	-	-	-
52	HF anode circuit inductance	-	740 microhenries	-
53	Frequency convertor (FC-Пр) valve	6A8	-	-
54	Anode circuit section of four-section gang tuning condenser (adjustable)	-	15-500 pf	-
55	Control grid decoupling condenser	MKB	0.25 mF	±20%
56	HF anode circuit semi-adjustable condenser	-	4.50 pf	-
57	Screen blocking condenser	БС	0.01 mF	±20%
58	HF heterodyne anode blocking condenser	БС	0.01 mF	±20%
59	Condenser for coupling heterodyne grid with circuit	КГК-1-Д-15-II	15 pf	±10%
60	Dividing condenser for reducing coupling between circuit and valve	КГК-1-М-30-I	30 pf	±5%
61	Condenser for padding heterodyne circuit	КСК-2-500-Г-680-1	1360 pf or 2x680 pf in parallel	±5%
62	Tuned circuit heterodyne condenser (semi-adjustable)	-	4-50 pf	-
63	HF heterodyne section of four-section gang tuning condenser (adjustable)	-	15-500 pf	-

Declassified in Part - Sanitized Copy Approved for Release @ 50-Y-2014/05/14 : CIA-RDP81-01043R004600130010-2

No. in wiring diagram	Name	Type	Value	Tolerance
64	HF heterodyne circuits inductance	-	450 microhenries	-
65	HF heterodyne coupling inductance	-	-	-
66	Heterodyne gridleak resistor (composition)	BC-0.25 W	0.1 Megohms	±10%
67	Screen adjusting resistor (composition)	BC-0.25 W	0.1 megohms (0.056-0.22)	±10%
68	HF heterodyne anode decoupling resistor (composition)	BC-0.5 W	33 kiloohms (15-56)	±10%
69	Resistor (composition of first IF amplifier control grid	BC-0.25 W	0.1 Megohms	±20%
70	First IF amplifier valve	6A8	-	-
71	First IF filter anode circuit condenser	KCO-2-500-B-200-I	200 pf	±5%
72	1 IF screen circuit condenser	KCO-2-500-B-200-I	200 pf	±5%
73	1 IF anode circuit inductance	-	9760 microhenries	-
74	1 IF grid circuit inductance	-	9760 microhenries	-
75	1 IF control grid decoupling condenser	БС	0.04 mF	±20%
76	1 IF screen supply circuit blocking condenser	БС	0.04 mF	±20%
77	Audio oscillator anode supply blocking condenser	БС	0.04 mF	±20%
78	Condenser for coupling between 6A8 valve heterodyne grid and audio frequency circuit	KCO-5-500-A-4700-II	4700 pf	±10%

Declassified in Part - Sanitized Copy Approved for Release @ 50-Y-2014/05/14 : CIA-RDP81-01043R004600130010-2

Declassified in Part - Sanitized Copy Approved for Release @ 50-Y-2014/05/14 : CIA-RDP81-01043R004600130010-2

No. in wiring diagram	Name	Type	Value	Tolerance
79	1 IF MH duty audio oscillator circuit condenser	KCO-5-500-A-4700-II	4700 pf (3300-6800)	±10%
80	1 IF valve generator gridleak resistor (composition)	BC-0.25 W	0.51 Megohms	±10%
81	MH duty audio oscillator circuit by--passing resistor (composition)	BC-0.25 W	0.1 Megohms (33 break)	±10%
82	1 IF screen adjusting resistor (composition)	BC-1 W	33 kiloohms (10-56)	±10%
83	1 IF valve generator anode decoupling resistor (composition)	BC-0.25 W	0.15 Megohms (0.1-0.33)	±10%
84	Wire-wound resistor for by-passing tuning indicator in order to adjust pointer deflection	ПС	20 ohms (10-90)	±5%
85	1 IF duty audio oscillator core-type transformer	-	-	-
86	2 IF anode circuit condenser	KCO-2-500-B-200-I	200 pf	±5%
87	2 IF grid circuit condenser	KCO-2-500-B-200-I	200 pf	±5%
88	2 IF anode circuit inductance	-	9760 microhenries	-
89	2 IF grid circuit inductance	-	9760 microhenries	-
90	2 IF valve	6K7	-	-
91	2 IF control grid decoupling condenser	БС	0.04 mF	±20%

Declassified in Part - Sanitized Copy Approved for Release @ 50-Y-2014/05/14 : CIA-RDP81-01043R004600130010-2

No. in wiring diagram	Name	Type	Value	Tolerance
92	2 IF screen supply blocking condenser	БС	0.01 mF	±20%
93	2 IF control grid decoupling resistor (composition)	BC-0.25 W	0.1 Megohms	±20%
94	2 IF screen bleeder resistor (composition)	BC-0.5 W	47 kiloohms (33-100)	±10%
95	Ditto	BC-0.25 W	47 kiloohms (27-100)	±5%
96	3 IF anode condenser	KCO-2-500-B-200-I	200 pf	±5%
97	3 IF diode circuit condenser	KCO-2-500-B-200-I	200 pf	±5%
98	3 IF anode inductance	-	9760 microhenries	-
99	3 IF diode inductance	-	9760 microhenries	-
100	2 IF anode supply blocking condenser	БС	0.04 mF	±20%
101	ASC circuit filter condenser	MKB	0.25 mF	±20%
102	2 IF anode decoupling resistor (composition)	BC-0.25 W	3.9 kiloohms	±10%
103	ASC filter resistor (composition)	BC-0.25 W	0.56 Megohms (0.27-1.5)	±10%
104	Detector diode load resistor (composition)	BC-0.25 W	0.39 Megohms (0.1-0.68)	±10%
105	Ditto	BC-0.25 W	0.39 Megohms (0.1-0.68)	±10%
106	Transient (composition) resistor to the grid of first low frequency amplifier (1 LFA-УНЧ)	BC-0.25 W	0.47 Megohms	±20%

Declassified in Part - Sanitized Copy Approved for Release @ SECRET 2014/05/14 : CIA-RDP81-01043R004600130010-2

Declassified in Part - Sanitized Copy Approved for Release @ 50-Y-2014/05/14 : CIA-RDP81-01043R004600130010-2

No. in wiring diagram	Name	Type	Value	Tolerance
107	1 LF gridleak resistor (composition)	BC-0.25 W	1 Megohm	±20%
108	1 LF grid bias resistor (composition)	BC-0.25 W	4.7 kiloohms	±10%
109	Delay resistor (composition)	BC-0.25 W	47 kiloohms (18-68)	±10%
110	MM and MH duty bias resistor (composition)	BC-0.25 W	47 kiloohms	±5%
111	K duty LF phasing resistor (composition)	BC-0.25 W	0.47 Megohms (0.1-0.75)	±20%
112	1 LF anode load resistor (composition)	BC-0.25 W	0.22 Megohms	±10%
113	1 LF detector valve	6Г7	-	-
114	Detector load by-pass condenser	KCO-2-500-A-100-II	100 pf	±10%
115	1 LFA grid voltage-dividing condenser	MKB	0.25 mF	±20%
116	Low capacity dividing condenser, connected in K duty	KCO-2-500-A-1000-II	1000 pf	±20%
117	2 LF grid circuit dividing condenser	MKB	0.25 mF	±20%
118	2 LF filter condenser of bias circuit	БС	0.04 mF	±20%
119	Condenser for by-passing high audio frequencies of 2 LF anode circuit	KCO-2-500-A-680-II	680 pf	±10%
120	2 LF valve	6K7	-	-
121	2 LF gridleak resistor (composition)	BC-0.25 W	1 Megohm	±20%
122	2 LF grid bias filter resistor (composition)	BC-0.25 W	0.47 Megohms	±20%
123	2 LF grid bias resistor (wire-wound)	ПС	300 ohms (200-500)	±5%

Declassified in Part - Sanitized Copy Approved for Release @ 50-Y-2014/05/14 : CIA-RDP81-01043R004600130010-2

No. in wiring diagram	Name	Type	Value	Tolerance
92	2 IF screen supply blocking condenser	БС	0.01 mF	±20%
93	2 IF control grid decoupling resistor (composition)	BC-0.25 W	0.1 Megohms	±20%
94	2 IF screen bleeder resistor (composition)	BC-0.5 W	47 kiloohms (33-100)	±10%
95	Ditto	BC-0.25 W	47 kiloohms (27-100)	±5%
96	3 IF anode condenser	KCO-2-500-B-200-I	200 pf	±5%
97	3 IF diode circuit condenser	KCO-2-500-B-200-I	200 pf	±5%
98	3 IF anode inductance	-	9760 microhenries	-
99	3 IF diode inductance	-	9760 microhenries	-
100	2 IF anode supply blocking condenser	БС	0.04 mF	±20%
101	ASC circuit filter condenser	MKB	0.25 mF	±20%
102	2 IF anode decoupling resistor (composition)	BC-0.25 W	3.9 kiloohms	±10%
103	ASC filter resistor (composition)	BC-0.25 W	0.56 Megohms (0.27-1.5)	±10%
104	Detector diode load resistor (composition)	BC-0.25 W	0.39 Megohms (0.1-0.68)	±10%
105	Ditto	BC-0.25 W	0.39 Megohms (0.1-0.68)	±10%
106	Transient (composition) resistor to the grid of first low frequency amplifier (1 LFA-УБЧ)	BC-0.25 W	0.47 Megohms	±20%

Declassified in Part - Sanitized Copy Approved for Release @ SECRET 2014/05/14 : CIA-RDP81-01043R004600130010-2

Declassified in Part - Sanitized Copy Approved for Release @ 50-Y-2014/05/14 : CIA-RDP81-01043R004600130010-2

No. in wiring diagram	Name	Type	Value	Tolerance
142	Laryngaphone jacks	-	-	-
143	Core-type output transformer	-	-	-
144	Eight-pin connector to PY-45A rotary convertor or aircraft mains	-	-	-
145	Eight-pin connector to MKO-42 course and T-F indicator and signal device	-	-	-
146	Eight-pin plug to control panel	-	-	-
147	BM audio oscillator frequency setting condenser	MKB	0.25 mF	±20%
148	Eight-pin connector to cable with tumbler	-	-	-
149	HF filter condenser in rotary convertor (RC-YMT) low-volt circuit	MKB	0.5 mF	±20%
150	LF filter condenser in rotary convertor high-volt circuit	MKB	0.5 mF	±20%
151	LF filter condenser in Rot.Conv. high volt circuit	MKB	1 mF	±20%
152	Convertor HF filter choke	-	100 microhenries	-
153	HF choke	-	100 microhenries	-
154	HF choke	-	750 microhenries	-
155	HF filter condenser	-	-	-
156	HF filter condenser in low volt circuit	БС	0.04 mF	±20%
157	HF filter condenser in low volt circuit	MKB	0.25 mF	±20%
158	HF filter condenser in Rot.Conv. high volt circuit	БС	0.04 mF	±20%

Declassified in Part - Sanitized Copy Approved for Release @ 50-Y-2014/05/14 : CIA-RDP81-01043R004600130010-2

Declassified in Part - Sanitized Copy Approved for Release @ 50-Yr 2014/05/14 : CIA-RDP81-01043R004600130010-2

No. in wiring diagram	Name	Type	Value	Tolerance
159	Ditto	БС	0.04 mF	±20%
160	Filament blocking condenser	БС	0.01 mF	±20%
161	Wire-wound dropping resistor in filament circuit	-	65 ohms	±3%
162	To - from indicator (PO) signal device	СЛЧ-51	-	-
163	MM and MH duty LF gain reducing resistor (composition)	BC-0.25 W	0.22 Megohms (0.1 break)	±10%
164	Coupling condenser of 3 IF (3ПЧ) circuit with ASC (АРЧ) diode	КСО-2-500-А-100-II	100 pf	±10%
165	Detector delay additional resistor (composition)	BC-0.25 W	4.7 kiloohms	±10%
166	ASC diode load resistor (composition)	BC-0.25 W	0.22 Megohms (0.18-1.0)	±10%
167	Anode supply ballast resistor (composition)	BC-1 W	33 kiloohms (22 break)	±10%
168	LF filter condenser in high volt circuit	MKB	1 mF	±20%
169	HF filter condenser in low volt circuit	БС	0.04 mF	±20%
170	Signal light brilliance control resistor (wire-wound)	БС	40 ohms (0-100)	±20%
171	Non-wire-wound resistor of voltage divider in additional bias voltage circuit to control grids of BM in K position	BC-0.25 W	33 kiloohms (18-100)	±10%
172	Relay HF supply filter condenser	БС	0.04 mF	±20%
173	Ditto	БС	0.04 mF	±20%

Declassified in Part - Sanitized Copy Approved for Release @ 50-Yr 2014/05/14 : CIA-RDP81-01043R004600130010-2

No. in wiring diagram	Name	Type	Value	Tolerance
174	Relay supply filter HF choke	-	4 millihenries	±10%
175	PO (to - from indicator) loop	-	25 microhenries	-
176	PПK-PO (RC-TFI) loop switching relay for 26 volts	-	-	-
177	Four-pin connector to loops and relay (on receiver)	-	-	-
178	Four-pin connector to loops and relay (on loop)	-	-	-
179	Eight-pin plug on TПУ cable receiver	-	-	-
180	Four-pin plug on TПУ cable to rotary convertor	-	-	-
181	PПK-PO duty tumbler switch	-	-	-
182	Headphone jack used in independent operation of PПKO-10M receiver	-	-	-

NOTE 1. The figures in brackets under the parameter values give the latter's adjustment limits in the same units as rated.

NOTE 2. In every compass outfit resistors 17 and 18 chosen on adjustment should have the same rated value.

NOTE 3. The circuit contains abbreviated designations: the upper figure designates specifications No., the lower -- abbreviated value designations.

Declassified in Part - Sanitized Copy Approved for Release @ SECRET 2014/05/14 : CIA-RDP81-01043R004600130010-2

Declassified in Part - Sanitized Copy Approved for Release @ 50-Yr 2014/05/14 : CIA-RDP81-01043R004600130010-2

APPENDICES

Declassified in Part - Sanitized Copy Approved for Release @ 50-Yr 2014/05/14 : CIA-RDP81-01043R004600130010-2

Declassified in Part - Sanitized Copy Approved for Release @ 50-Yr 2014/05/14 : CIA-RDP81-01043R004600130010-2

Dimensional and Installation Diagram of Type РПКС-10М Radio Compass and Passing Indicator

a) Cut-out in plating for [illegible] dia. 42 mm; b) Standard [illegible] installa-

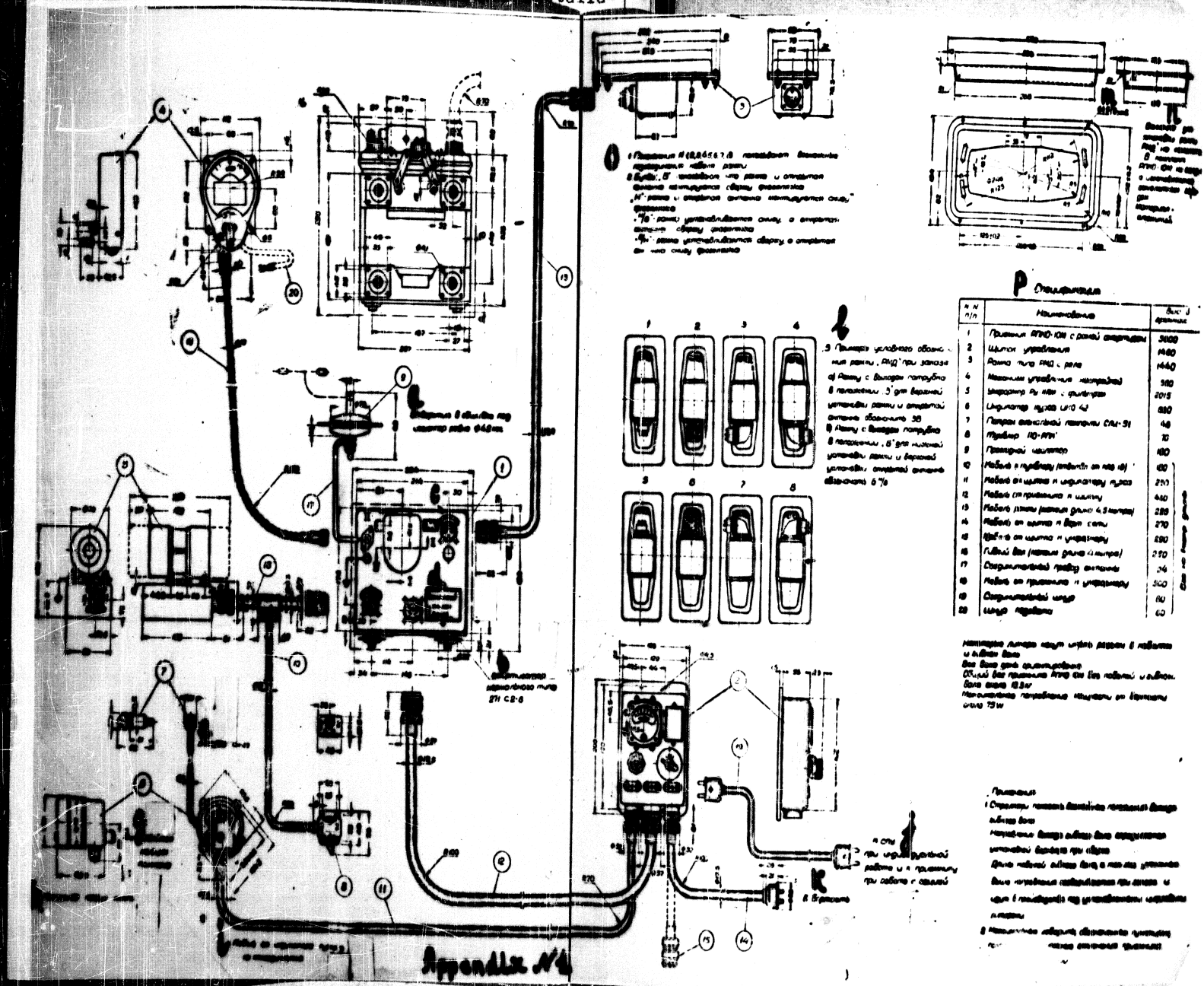

Appendix №4

Declassified in Part - Sanitized Copy Approved for Release @ 50-Yr 2014/05/14 : CIA-RDP81-01043R004600130010-2

Declassified in Part - Sanitized Copy Approved for Release @ 50-Yr 2014/05/14 : CIA-RDP81-01043R004600130010-2

APPENDIX No.1

Dimensional and Installation Diagram of Type ПКО-10М Radio Compass and Passing Indicator

a) Cut-out in plating for insulator dia, 42 mm; b) Standard type shock-absorber; c) Loop; d) Balance. Transmitter installation; e) Signal lamp, f) Course indicator; g) Fastened with a Kollsman ring; h) Fastening ring removed; i) Cable from course indicator not disconnectable; j) To radio compass receiver on independent operation and to plane receiver in operation with plane radio set; k) To aircraft mains; l) Examples of loop position designations: a) 3B for loop and connector outlet position "3" for top-mounted loop and open aerial; b) 6 H for loop and connector outlet in position No.6 for bottom-mounted and loop and top-mounted open aerial. m) Six 4.5 mm holes; n) Pan-shaped mounting for installation of type РМД loop on aircraft. Not included in radio compass equipment, but manufactured by aircraft plant. Material -- aluminium; o) 1. Positions 1.2.3.4.5.6.7 and 8 indicate alternative connections of frame cable. 2. Letters indicate, respectively: "B" - that frame and open aerial are installed atop fuselage; "H" - that frame and open aerial are installed under fuselage; "H/B" - that frame is installed under fuselage, and open aerial atop fuselage; "B/H" - frame is installed atop, and open aerial under fuselage.

Declassified in Part - Sanitized Copy Approved for Release @ 50-Yr 2014/05/14 : CIA-RDP81-01043R004600130010-2

Declassified in Part - Sanitized Copy Approved for Release @ 50-Yr 2014/05/14 : CIA-RDP81-01043R004600130010-2

P Specifications

No. i.e.	Name	Weight in grams
1	Radio compass receiver with shock-mounting	5600
2	Control panel	1460
3	Type РМД loop with relay	1440
4	Remote tuning control	560
5	Type РУ-11АМ rotary converter with filter	2015
6	Type ИКО-42 course indicator	630
7	Type СШ-51 signal light socket	48
8	РО-РПК tumbler	70
9	Lead-through insulator	180
10	Cable to tumbler (tap from cable 18)	130
11	Cable from control panel to course indicator	200
12	Cable from receiver to control panel	430
13	Loop cable (maximum length 4.5 metres)	225
14	Cable from control panel to aircraft mains	270
15	Cable from control panel to rotary converter	290
16	Flexible shaft (maximum length 4 metres)	250
17	Aerial connecting wire	24
18	Cable from receiver to rotary convertor	300
19	Connecting cord	60
20	Illuminating lamp cord	60

Some units may have connectors in cables and flexible shaft. All weights are given approximately.

Overall weight of receiver without cables and flexible shaft -- about 12.5 kg.

Maximum power consumption -- about 75 W.

Declassified in Part - Sanitized Copy Approved for Release @ 50-Yr 2014/05/14 : CIA-RDP81-01043R004600130010-2

Declassified in Part - Sanitized Copy Approved for Release @ 50-Yr 2014/05/14 : CIA-RDP81-01043R004600130010-2

NOTES:

1) Arrows indicate possible positions of flexible shaft end. This is determined by the position of the vernier as installed during assembly.

The length and position of the flexible shafts are specified in the order and are accepted for manufacture with the standard designations.

2) Maximum receiver dimensions (dotted lines) show possible variations from specified outline.

Declassified in Part - Sanitized Copy Approved for Release @ 50-Yr 2014/05/14 : CIA-RDP81-01043R004600130010-2

Declassified in Part - Sanitized Copy Approved for Release @ 50-Yr 2014/05/14 : CIA-RDP81-01043R004600130010-2

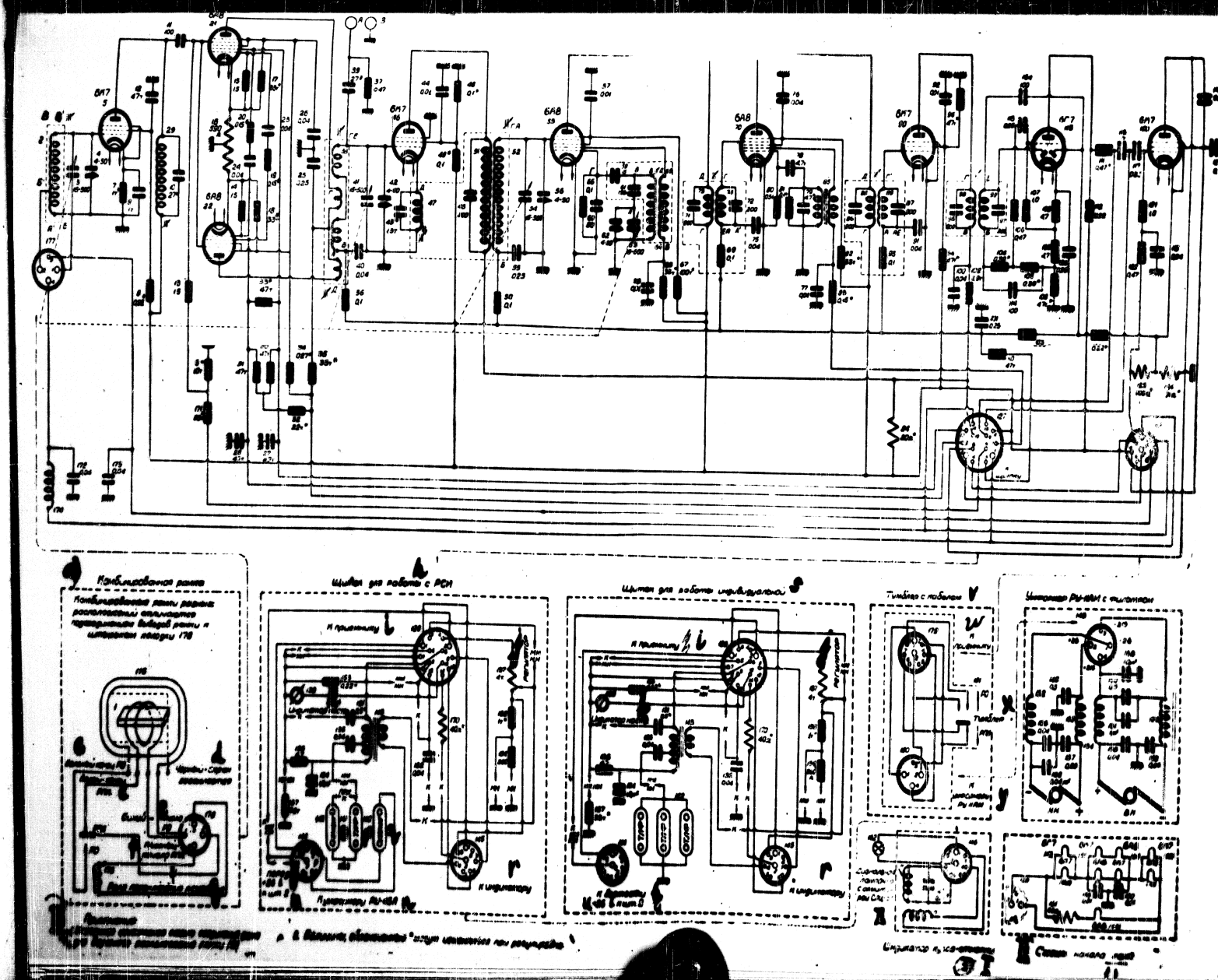

Declassified in Part - Sanitized Copy Approved for Release @ 50-Yr 2014/05/14 : CIA-RDP81-01043R004600130010-2

Declassified in Part - Sanitized Copy Approved for Release @ 50-Yr 2014/05/14 : CIA-RDP81-01043R004600130010-2

APPENDIX No.2

Type РПКО-10М Wiring Diagram

a) Combination loop. Combination loops for different types of mounting differ in loop connection to the pins of connector 170; b) Green end of PO (to - from indicator); c) White end of radio compass; d) Black shield put to earth; e) Blue -- beginning of TF1; f) Red -- beginning of radio compass; g) Loop switching relay; h) Control panel for operation with aircraft radio set; i) To receiver; j) Control; k) Tuning indicator; l) Front; m) +26 volts to pin 2; n) To РУ-45А rotary convertor; o) Reception; p) Telephone; q) Laryngaphone; r) To indicator; s) Control panel for independent operation; t) To aircraft mains; u) +26 volts to pin 2; v) Tumbler with cable; w) To receiver; x) PO, Tumbler РПК; y) To РУ-11АМ convertor; z) Type СЛЦ-51 signal lamp with fixture.

I - course - TF indicator; II - Valve filament diagram;

III - NOTES: 1) This wiring connection diagram is given for top-mounted loop.

2) The designated values may be changed during adjustment.

Declassified in Part - Sanitized Copy Approved for Release @ 50-Yr 2014/05/14 : CIA-RDP81-01043R004600130010-2

Declassified in Part - Sanitized Copy Approved for Release @ 50-Yr 2014/05/14 : CIA-RDP81-01043R004600130010-2

APPENDIX No. 3

Radio Compass-TF Indicator Testing Equipment

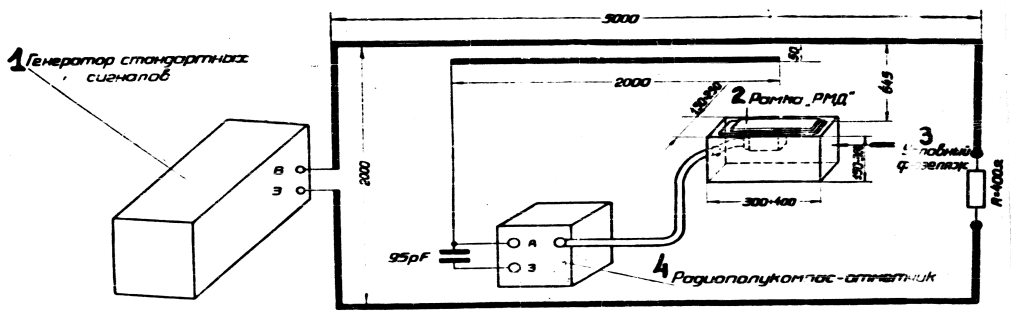

1 - Standard signal generator; 2 - Type РМД loop; 3 - Phantom fuselage; 4 - Radio compass-TF indicator.

NOTES:

1. The distance from the top line to the screened cage ceiling and side walls, which are parallel with the top line plane, should be not less than 500 mm.

2. The equipment and cables should be so arranged as to minimize the additional bearing error.

Declassified in Part - Sanitized Copy Approved for Release @ 50-Yr 2014/05/14 : CIA-RDP81-01043R004600130010-2

Declassified in Part - Sanitized Copy Approved for Release @ 50-Yr 2014/05/14 : CIA-RDP81-01043R004600130010-2

APPENDIX No.4

Diagram of Connection Between РПКО-10М Radio Compass-TF Indicator and РСИ Aircraft Radio Receiver

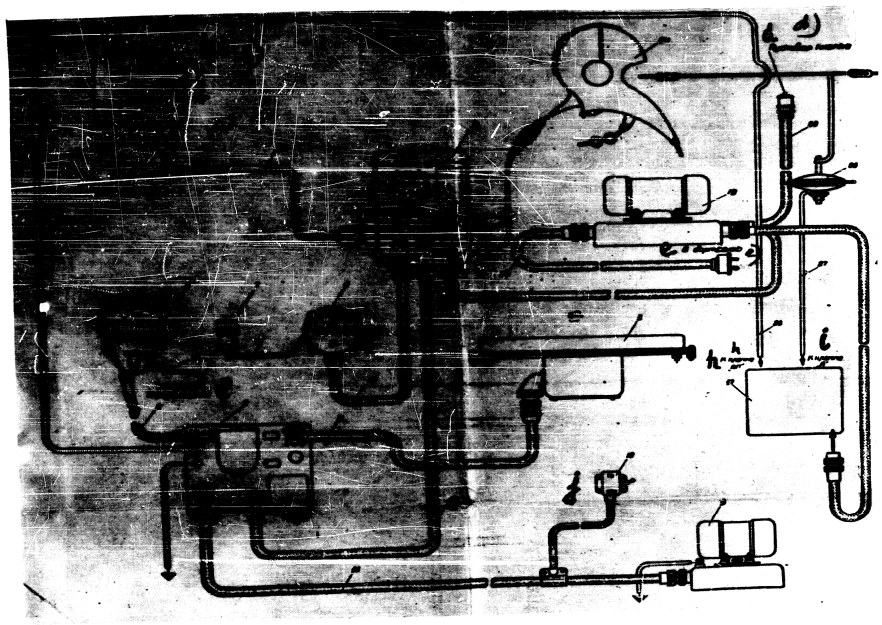

a) To terminal A; b) To terminal З; c) To output; d) Starting push-button; e) To mains; f) To mains; g) Course-TF indicator; h) To terminal A; i) To terminal A; j) TFI, RComp. tumbler.

The connection diagram is given for a radio compass manufactured for conjoint operation with an РСИ aircraft radio receiver.

Declassified in Part - Sanitized Copy Approved for Release @ 50-Yr 2014/05/14 : CIA-RDP81-01043R004600130010-2

Declassified in Part - Sanitized Copy Approved for Release @ 50-Yr 2014/05/14 : CIA-RDP81-01043R004600130010-2

to Appendix No.4

Specifications

No.i.o.	Designation
1	Radio compass receiver with shock-mounting
2	Control panel
3	PПK and PO loop
4	Remote control mechanism
5	PУ-11AM rotary convertor for PПKO-10M radio compass
6	Course-TF indicator
7	Signal light fixtures
8	Flexible shaft
9	Loop cable
10	Cable from radio compass receiver to control panel
11	Cable from radio compass receiver to PУ-11AM rotary convertor with tap to PO-PПK tumbler
12	PПK-PO tumbler
13	Cable from course-TF indicator to control panel
14	Cord from course-TF indicator to signal lamp
15	Cable from control panel to PУ-45A rotary convertor
16	Lighting cord
17	PCИ transmitter
18	PCИ receiver
19	PУ-45A rotary convertor of PCИ transmitter
20	Cable from PУ-45A rotary convertor to aircraft mains
21	Cable from PУ-45A rotary convertor to transmitter
22	Cord from control panel to PCИ receiver.
23	Cable from PУ-45A rotary convertor to starting push--button
24	Interphone helmet
25	Lead-through insulator
26	Connecting cord
27	Aerial lead-in
28	Rejector lead-in

Declassified in Part - Sanitized Copy Approved for Release @ 50-Yr 2014/05/14 : CIA-RDP81-01043R004600130010-2

Declassified in Part - Sanitized Copy Approved for Release @ 50-Yr 2014/05/14 : CIA-RDP81-01043R004600130010-2

APPENDIX No.5

PΠKO-10M Chassis Wiring Diagram

1) Rear panel; 2) Side panel; 3) Bottom panel; 4) Side panel; 5) Intermediate frequency filter; 5a) 1 Intermediate frequency amplifier; 6) Intermediate frequency filter; 7) Convertor; 8-9) Anode-circuit; 10-11) Heterodyne circuit; 12) Heterodyne trimmer; 13) 2 Intermediate frequency amplifier; 14-15) Aerial circuit; 16) Anode trimmer; 17) Amplifier valves 21 and 22; 18) HF amplifier; 19) To potentiometer; 20) To current receiving spring of device; 21) Aerial trimmer; 22) Amplifier; 23) Balanced modulator; 24) Balanced modulator; 25) To device current

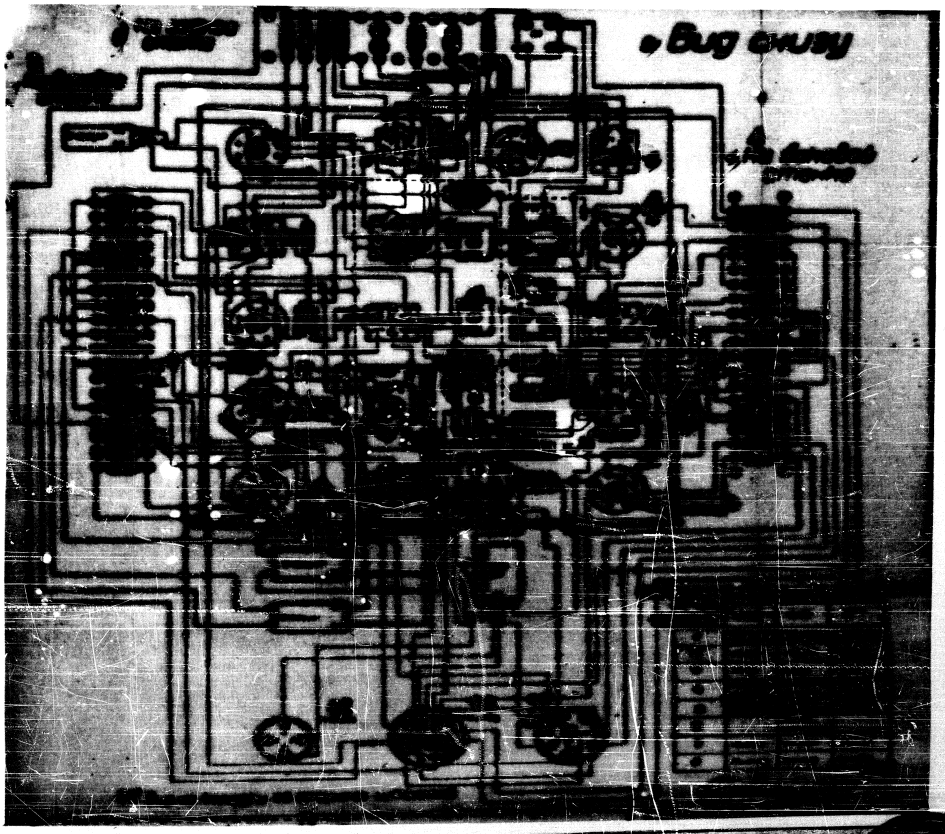

Declassified in Part - Sanitized Copy Approved for Release @ 50-Yr 2014/05/14 : CIA-RDP81-01043R004600130010-2

Declassified in Part - Sanitized Copy Approved for Release @ 50-Yr 2014/05/14 : CIA-RDP81-01043R004600130010-2

APPENDIX No.5

PПКО-10М Chassis Wiring Diagram

1) Rear panel; 2) Side panel; 3) Bottom panel; 4) Side panel; 5) Intermediate frequency filter; 5a) 1 Intermediate frequency amplifier; 6) Intermediate frequency filter; 7) Convertor; 8-9) Anode-circuit; 10-11) Heterodyne circuit; 12) Heterodyne trimmer; 13) 2 Intermediate frequency amplifier; 14-15) Aerial circuit; 16) Anode trimmer; 17) Amplifier valves 21 and 22; 18) HF amplifier; 19) To potentiometer; 20) To current receiving spring of device; 21) Aerial trimmer; 22) Amplifier; 23) Balanced modulator; 24) Balanced modulator; 25) To device current receiving spring; 26) 2 detector; 27) 1 LF amplifier; 28) Amplifier; 29) Loop amplifier; 30) Loop transformer; 34) Anode choke No.29; 35-36) Loop circuit; 37) 2 amplifier; 38) Choke; 39) Relay; 40) To terminal;

41) Valves pin set up

Pin Nos. \ Valve types	6K7	6A8	6Г7
1	Metal screen	Metal screen	Metal screen
2	Filament	Filament	Filament
3	Anode	Anode	Anode
4	Screen grid	Screen grid	Anode of 1 diode
5	Suppressor	Heterodyne grid	Anode of 2 diode
6	--	Heterodyne anode	--
7	Filament	Filament	Filament
8	Cathode	Cathode	Cathode

42) To loop; 43) To control panel; 44) To rotary convertor; 45) View of connector from pins; 46) Filament diagram; 47) View of valve panels from wiring, and of connector from pins;

Declassified in Part - Sanitized Copy Approved for Release @ 50-Yr 2014/05/14 : CIA-RDP81-01043R004600130010-2

Declassified in Part - Sanitized Copy Approved for Release @ 50-Yr 2014/05/14 : CIA-RDP81-01043R004600130010-2

48) Outlet at top for control grid; 49) View of pins; 50) Symbols; 51) Condenser; 52) BC-0.25 W and 0.5 resistors; 53) Type ПЕ resistor; 54) No. in diagram; 55) Value; 56) BC-1B resistor; 57) General earthing cable (bus); 58) Top view of radio compass receiver chassis; 59) 0.25 mc condenser No.55; 60) 2=0.04 mF No.75 and 76; 61) IF amplifier, audio heterodyne; 62) 2 IF filter; 63) Gang heterodyne section; 64) 2 IF amplifier; 65) Gang anode section; 66) 3 IF filter; 67) 0.47 megohms resistor No.37; 68) 2 detector; 1 LF amplifier; 69) Condenser No.39; 70) 2 LF amplifier; 71) Aerial section; 72) Aerial lead-in; 73) Terminal

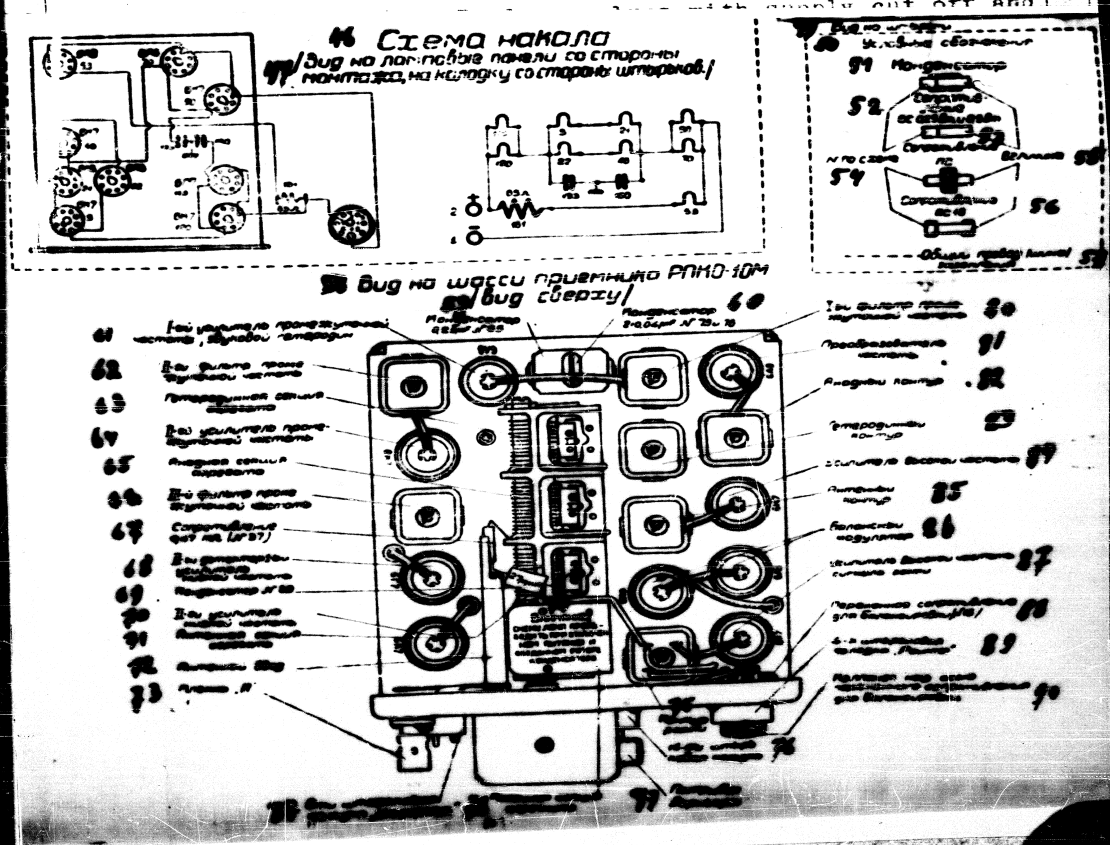

Declassified in Part - Sanitized Copy Approved for Release @ 50-Yr 2014/05/14 : CIA-RDP81-01043R004600130010-2

Declassified in Part - Sanitized Copy Approved for Release @ 50-Yr 2014/05/14 : CIA-RDP81-01043R004600130010-2

48) Outlet at top for control grid; 49) View of pins; 50) Symbols; 51) Condenser; 52) BC-0.25 W and 0.5 resistors; 53) Type ПС resistor; 54) No. in diagram; 55) Value; 56) BC-1B resistor; 57) General earthing cable (bus); 58) Top view of radio compass receiver chassis; 59) 0.25 mc condenser No.55; 60) 2=0.04 mF No.75 and 76; 61) IF amplifier, audio heterodyne; 62) 2 IF filter; 63) Gang heterodyne section; 64) 2 IF amplifier; 65) Gang anode section; 66) 3 IF filter; 67) 0.47 megohms resistor No.37; 68) 2 detector; 1 LF amplifier; 69) Condenser No.39; 70) 2 LF amplifier; 71) Aerial section; 72) Aerial lead-in; 73) Terminal A; 74) W A R N I N G ! Replace valves with supply cut off and condenser rotor fully advanced; 75) Loop circuit; 76) 14-pin connector; 77) 8-pin connector of rotary convertor; 78) Loop section; 79) Vernier connecting sleeve; 80) 1 IF filter; 81) Frequency convertor; 82) Anode circuit; 83) Heterodyne circuit; 84) HF amplifier; 85) Antenna circuit; 86) Balanced modulator; 87) Loop signal HF amplifier; 88) Adjustable resistor for balance adjustment (No.16); 89) 4-pin connector (loop); 90) Cap over adjustable balance resistor shaft.

Declassified in Part - Sanitized Copy Approved for Release @ 50-Yr 2014/05/14 : CIA-RDP81-01043R004600130010-2

Declassified in Part - Sanitized Copy Approved for Release @ 50-Yr 2014/05/14 : CIA-RDP81-01043R004600130010-2

APPENDIX No.6

РПКО-10М Radio Compass Valve Operating Conditions

1. To rotary convertor

NOTE:

When measuring the operating conditions of valves Nos.9, 21, and 22, set the duty selector to K. The voltage on the screen and anode of heterodyne valve

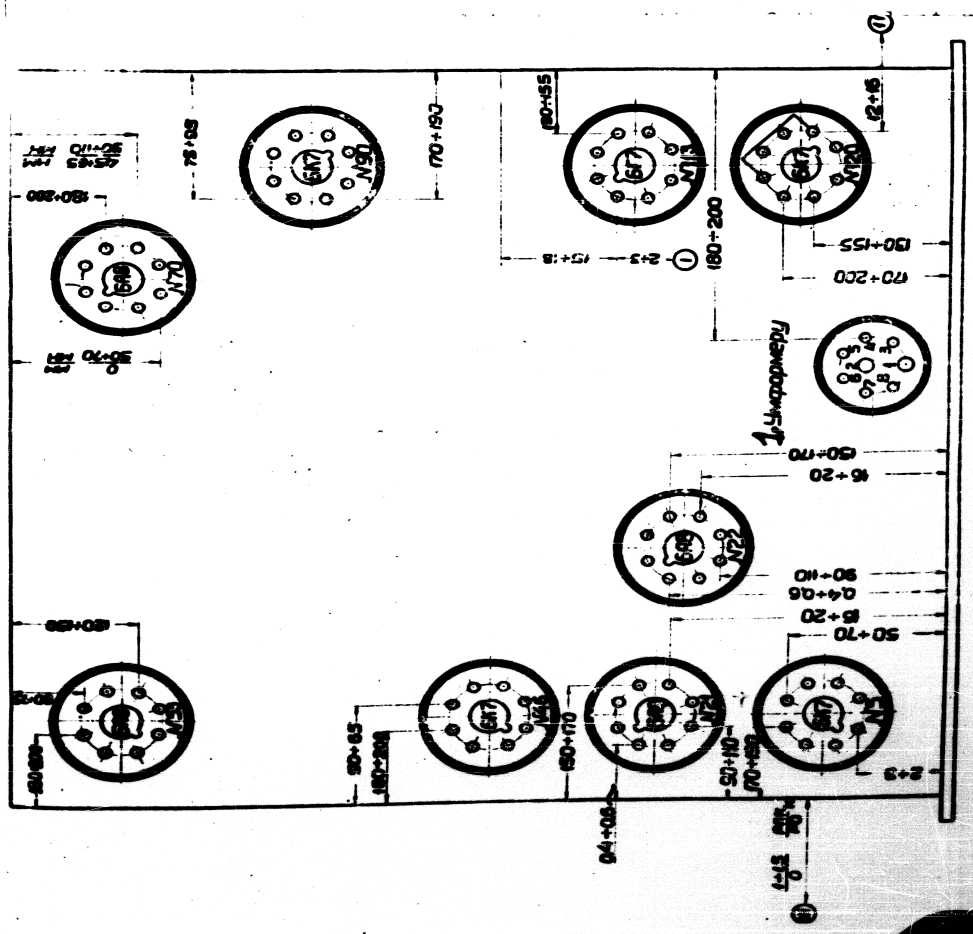

Declassified in Part - Sanitized Copy Approved for Release @ 50-Yr 2014/05/14 : CIA-RDP81-01043R004600130010-2

Declassified in Part - Sanitized Copy Approved for Release @ 50-Yr 2014/05/14 : CIA-RDP81-01043R004600130010-2

APPENDIX No.6

РПКО-10М Radio Compass Valve Operating Conditions

I. To rotary convertor

NOTE:

When measuring the operating conditions of valves Nos.9, 21, and 22, set the duty selector to K. The voltage on the screen and anode of heterodyne valve No.70 may be measured in two positions of the selector: МД and ММ. On all other measurements the duty selector should be at ММ. The figures on the diagram show voltage measured in volts. The valve panels are shown as viewed from the wiring, and the connectors as viewed from the pins.

I - Common point of resistors Nos.107, 108 and 165.

II - Common point of resistors Nos.123 and 122.

III - Common point of resistors Nos.13, 6 and 171.

See appendix "Radio Compass Chassis Wiring Diagram".

Declassified in Part - Sanitized Copy Approved for Release @ 50-Yr 2014/05/14 : CIA-RDP81-01043R004600130010-2

Declassified in Part - Sanitized Copy Approved for Release @ 50-Yr 2014/05/14 : CIA-RDP81-01043R004600130010-2

RADIO COMPASS AND TO-FROM INDICATOR

TYPE РПКО-10М

Brief Description
and Operating Instructions

Declassified in Part - Sanitized Copy Approved for Release @ 50-Yr 2014/05/14 : CIA-RDP81-01043R004600130010-2

Declassified in Part - Sanitized Copy Approved for Release @ 50-Yr 2014/05/14 : CIA-RDP81-01043R004600130010-2

23951

RADIO COMPASS AND TO - FROM INDICATOR

TYPE РПКО-10М

Brief Description

and Operating Instructions

Declassified in Part - Sanitized Copy Approved for Release @ 50-Yr 2014/05/14 : CIA-RDP81-01043R004600130010-2

Declassified in Part - Sanitized Copy Approved for Release @ 50-Yr 2014/05/14 : CIA-RDP81-01043R004600130010-2

C O N T E N T S

	Page
1. OPERATING INSTRUCTIONS	4
§1. Purpose	4
§2. Basic Characteristics	4
§3. Main Components	5
§4. Brief Description, Purpose and Use of Controls	7
§5. Principle of Operation	16
§6. Wiring Diagram	25
§7. Pre-Installation Test	30
§8. Installation on Aircraft	34
§9. Post-Installation Check	37
§10. Pre-Flight Testing	38
§11. Management in Flight	39
§12. Use in Flight	40
§13. Routine Inspection	45
§14. Storage and Slushing	47
§15. Winter Operation and Maintenance	48
§16. Guaranty	48
2. TROUBLES AND REMEDIES	50
3. SPECIFICATIONS	56
4. SUPPLEMENT No.1	70
5. SUPPLEMENT No.2	74
6. SUPPLEMENT No.3	75
7. SUPPLEMENT No.4	76
8. SUPPLEMENT No.5	78
9. SUPPLEMENT No.6	80

-ooo-

Declassified in Part - Sanitized Copy Approved for Release @ 50-Yr 2014/05/14 : CIA-RDP81-01043R004600130010-2

Declassified in Part - Sanitized Copy Approved for Release @ 50-Yr 2014/05/14 : CIA-RDP81-01043R004600130010-2

W A R N I N G !

In flying to or from a radio station, turns exceeding 30-40° may cause the course indicator pointer to swing back. (At right turns the pointer goes right, then slightly deflects to the left). In this case, increase compass sensitivity by turning the angular sensitivity control clockwise till the pointer rests against the stop.

After that, the pointer backswing should not occur.

When heading to or from the radio station, the angular sensitivity control may be left in any position convenient for piloting.

Declassified in Part - Sanitized Copy Approved for Release @ 50-Yr 2014/05/14 : CIA-RDP81-01043R004600130010-2

Declassified in Part - Sanitized Copy Approved for Release @ 50-Yr 2014/05/14 : CIA-RDP81-01043R004600130010-2

1. OPERATING INSTRUCTIONS

§ 1. Purpose

The radio compass and to - from indicator type РПКО-10М is a radio navigational aid for pursuit, strafer, and bomber-fighter aircraft.

The instrument assists in performing the following operations:

1) Homing an airfield equipped with a range station, in absence of ground contact.

2) Approach to an on-course control centre equipped with a radio transmitter, further flight from which is controlled with other means of navigation.

3) Beacon range flying.

4) Indication of passage over or near a radio station.

5) Approach to blind landing.

§ 2. Basic Characteristics

The radio compass and to - from indicator has the following main parameters:

1. Continuous frequency range from 275 to 725 kilocycles.

2. Operating range with homing stations type 3А, ПАР, ПАР-3 -- 150-200 km.

3. Indicator marking range with type 3А and ПАР-3 stations -- 50 km.

4. Receiver sensitivity 10-12 microvolts.

5. Total current consumption from aircraft mains -- 2.5 a.

6. Supply voltage 26 V ± 10% (23.4-28.6 v).

7. Weight without cables approximately 12.5 kg.

Declassified in Part - Sanitized Copy Approved for Release @ 50-Yr 2014/05/14 : CIA-RDP81-01043R004600130010-2

Declassified in Part - Sanitized Copy Approved for Release @ 50-Yr 2014/05/14 : CIA-RDP81-01043R004600130010-2

3. Main Units

The radio compass and to - from indicator type РПКО-10М includes the units whose designation, weights and dimensions are given in Table No.1.

Connections between individuel units are presented in the wiring and dimensional diagram, Supplement No.1.

Table No.1

Weights and Dimensions of Separate Units

Nos. i.o.	Designation	Weight in gr	Length in mm	Width in mm	Height in mm
1	Receiver	5300	276	214	174
2	Shock-absorbing mounting	300	-	-	-
3	Control panel	1460	200	135	83
4	Combination loop, fixed, type РМА with loop switching relay box type "РПК" - "РО"	1440	253	98	78.5
5	РУ-11АМ converter with filter	2015	135	89	140
6	Course and to - from indicator, type ИКО-42	630	diameter	100.6	90
7	Remote tuning control	560	160	112	82
8	Signal device	48	diameter	21	54
9	"РПК-РО" tumbler in casing	70	46	42.5	26.5
10	Flexible shaft				
11	Aircraft mains cable				
12	Cable connecting receiver and control panel				
13	Cable connecting control panel with to - from indicator (permanently connected with indicator)				
14	Cable connecting receiver with rotary converter				
15	Cable of tumbler (tap from cable connecting receiver with converter)				
16	Cord from indicator to signal device (permanently connected with indicator)				
17	Loop cable				
18	Cable from duty selector to indicator				
19	Box with duty selector				

(10-18) cable and flexible shaft dimensions are specified when ordering and depend on type of aircraft

Declassified in Part - Sanitized Copy Approved for Release @ 50-Yr 2014/05/14 : CIA-RDP81-01043R004600130010-2

Declassified in Part - Sanitized Copy Approved for Release @ 50-Yr 2014/05/14 : CIA-RDP81-01043R004600130010-2

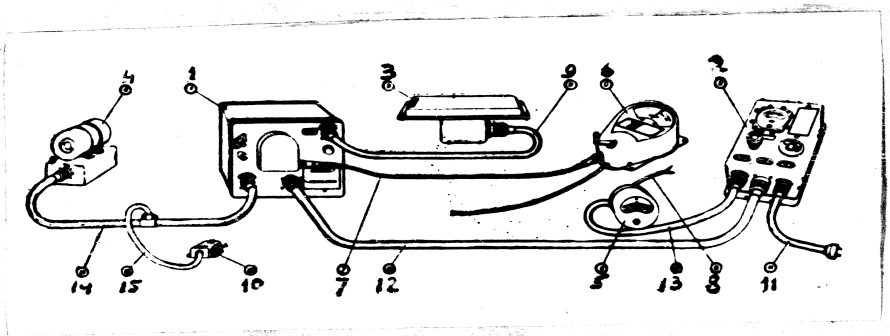

General View of РПКО-10М Outfit

1 - Receiver; 2 - Control panel; 3 - Combination loop (fixed, type РМД); 4 - Type РУ-11АМ rotary convertor with filter; 5 - Course-T-F indicator, type ИКО-42; 6 - Remote tuning control; 7 - Flexible shaft; 8 - Cord from indicator to signal lamp; 9 - Loop cable; 10 - РПК-РО duty tumbler; 11 - Aircraft mains cable; 12 - Cable from receiver to control panel; 13 - Cable connecting control panel with course indicator; 14 - Cable connecting receiver with rotary convertor; 15 - Tumbler cable (tap from cable connecting receiver with rotary convertor).

Declassified in Part - Sanitized Copy Approved for Release @ 50-Yr 2014/05/14 : CIA-RDP81-01043R004600130010-2

Declassified in Part - Sanitized Copy Approved for Release @ 50-Yr 2014/05/14 : CIA-RDP81-01043R004600130010-2

§ 4. Brief Description of Design, Purpose and Use of Controls

1. Receiver

All the receiver parts are mounted on an aluminium chassis which presents a stamped horizontal panel riveted to the vertical front panel. The top of the chassis mounts valve sockets HF and IF tuned circuits, and variable gang condenser. Under the chassis are trimmers, fixed condensers and resistors. On the front panel of the receiver is located the tuning vernier coupled with the gang condenser shaft and provided with a sleeve for attaching the flexible shaft. The front panel also mounts a screw-driver adjustable balance corrector designed for balancing the arms of the balanced modulator. Balance is checked by the position of the course indicator pointer only during "compass" duty and in absence of signals. If balanced correctly, the pointer must perform slight symmetrical oscillations about zero.

The two balanced modulator valves type 6A8, pos. Nos.21 and 22, are placed side by side at the right, nearer to the front panel. Replacement of the valves may upset their balance, which is restored as follows.

a) From the range of frequencies between 275-400 kc, choose a receiver tuning frequency at which the radio station signals are inaudible.

b) If that makes the course indicator pointer oscillate right or left of the zero mark on the scale, take off the cap of the corrector screw and with a screw-driver turn it in a direction opposite to the pointer deflection until the pointer oscillates symmetrically about zero. After that check the balance in TPI duty by setting the Compass-Indicator (PПK-PC) switch to "Indicator" (PC). The pointer should deflect to not more than 3/4 of the scale.

Declassified in Part - Sanitized Copy Approved for Release @ 50-Yr 2014/05/14 : CIA-RDP81-01043R004600130010-2

Declassified in Part - Sanitized Copy Approved for Release @ 50-Yr 2014/05/14 : CIA-RDP81-01043R004600130010-2

2. Control Panel

The control panel is housed in an aluminium box closed from the bottom by a lid with a rubber gasket. The panel mounts: tuning indicator, duty selector, manual volume control, output transformer and three jacks. Beneath are connectors for cables running to the receiver, course indicator, and aircraft power circuit or RY-45A convertor. Control panels are manufactured in two modifications. The first is used for RC-TFI operating without the aircraft radio station and the second for conjoint operation (from one control panel) with the latter.

Externally, these modifications differ in the following:

a) In the first type the duty selector label bears the headings "ВЫКЛ" (OFF), "К" (COMPASS), ММ (MODULATED BEACON) and МН (NON-MODULATED BEACON) while the jacks are connected in parallel and labelled "ТЛФ" (TELEPHONE).

b) In the second type the duty selector label has the headings: "ПРД" (TRANSMITTER), "ПРМ" (RECEIVER), "К", "ММ", "МН", while the jacks are labelled "ПРИЕМ", (RECEPTION), "ТЛФ", and "ЛАРИНГ" (LARYNGAPHONE).

Duty Switch Functions

The operating positions of the RC-TFI are "К", "ММ", "МН". In positions "ВЫКЛ" (OFF), "ПРД", "ПРМ" the radio compass and to - from indicator is switched off. In the second type, the selector switch in position "ПРД" cuts in the РСИ transmitter, while in position ПРМ it cuts out the transmitter and connects the RCИ receiver output to the head-phones.

a) In position К the device operates either as a "compass" checking the aircraft's course or as a to - from indicator showing the moment the plane passes over the radio sta-

Declassified in Part - Sanitized Copy Approved for Release @ 50-Yr 2014/05/14 : CIA-RDP81-01043R004600130010-2

Declassified in Part - Sanitized Copy Approved for Release @ 50-Yr 2014/05/14 : CIA-RDP81-01043R004600130010-2

tion or crosses its beam. The device is switched over from RC to TFI duty by means of the auxiliary duty tumbler "RC-TFI" (РПК-РО).

In panels of the second type, the РСИ receiver output both in positions K and ПРМ is connected to the headphones so as to enable simultaneous RC operation and radio communication reception.

b) Positions "MM" and "MH" permit aural reception of radio station or beacon signals; modulated signals (speech, music, tonal telegraph) are received in position MM, and may also be received with some distortion in position MH. Unmodulated signals are received only in position MH.

Functions of the Volume and Angular Sensitivity Control

The manual control may operate:

a) in position K as an angular sensitivity control;

b) in positions MM and MH as a volume control.

Clockwise rotation of this control increases angular sensitivity or volume. To change over from position MM or MH to K, turn the control knob all the way right.

Functions of Tuning Indicator

The tuning indicator shows the exact tuning position when the range station is near. With the duty selector at K, that position is found by the maximum right deflection of the tuning indicator pointer.

In positions MM and MH the tuning indicator responds only to very loud signals. Therefore, when the range station is far, tuning is usually controlled aurally by maximum telephone volume.

Declassified in Part - Sanitized Copy Approved for Release @ 50-Yr 2014/05/14 : CIA-RDP81-01043R004600130010-2

Declassified in Part - Sanitized Copy Approved for Release @ 50-Yr 2014/05/14 : CIA-RDP81-01043R004600130010-2

Telephone Jacks

In panels of the first kind all three jacks are intended for headphones which may be inserted in any pair.

In the second modification the jacks are used to connect the plugs of headphones, laryngaphones and PCИ receiver output according to the marking.

3. "RC-TFI" Tumbler

The RC-TFI tumbler is used only with the duty selector in position K. In all other selector positions it is cut out. The RC-TFI tumbler is contained in a separate box connected by a thin cable with the cable running from the receiver to the P9-11AM rotary convertor. Near the tumbler knob are engraved marks "PПK"-"PO" (RC-TFI). The tumbler in position PПK (RC) sets the equipment for compass duty, while in position PO (TFI) converts the gear into a to - from indicator, flashing on the pilot lamp.

4. Remote Tuning Control

The remote tuning control consists of:

a) tuning transmitter;

b) vernier connected with the shaft of the receiver gang tuning condenser;

c) flexible shaft coupling the tuning transmitter with the vernier.

The tuning transmitter has a tuning crank, moving scale graduated in steps of 10 kc, a glass window in the transmitter housing with a sight line against which is read the tuning frequency indicated by the moving scale, and a sleeve for connecting the flexible shaft.

In the assembled unit the rotation of the transmitter crank is transmitted simultaneously to the tuning scale through a worm-gear drive and to the receiver tuning condenser

Declassified in Part - Sanitized Copy Approved for Release @ 50-Yr 2014/05/14 : CIA-RDP81-01043R004600130010-2

Declassified in Part - Sanitized Copy Approved for Release @ 50-Yr 2014/05/14 : CIA-RDP81-01043R004600130010-2

through the flexible shaft and receiver vernier. When connecting the tuning device to the RC-TFI receiver, see that the tuning scale readings are aligned with the true receiver tuning frequency.

To fulfil this requirement, do the following:

a) Connect the flexible shaft to the transmitter and vernier.

b) Rotate the tuning crank all the way counter-clockwise.

c) Disconnect the flexible shaft from the transmitter and, rotating the tuning crank, set the moving scale line labelled "УПОР" (STOP) against the sight line on the glass.

d) Connect the flexible shaft to the transmitter again and rotating the tuning crank counter-clockwise make sure that rotation is stopped when both the said lines coincide.

Normally, the scale readings may differ from the true receiver tuning frequency by 2.5-5 kc.

5. Course and To--From Indicator

The course and to - from indicator is one and the same device which is used to check:

a) Correctness of course, with the duty selector in position "Compass" (K).

b) Moment of flight over the range station with the duty selector at RFI.

Written in luminous paint on the top of the scale are the following headings: in the middle "НУЛЬ" (ZERO), at the left the letter Л (L) and a miniature aircraft headed towards the middle of the scale, and at the right the П (RIGHT) and a miniature aircraft heading away from the middle of the scale.

The pointer is also coated with luminous paint. With the RC switched off, the pointer assumes the central (zero) position.

Declassified in Part - Sanitized Copy Approved for Release @ 50-Yr 2014/05/14 : CIA-RDP81-01043R004600130010-2

Declassified in Part - Sanitized Copy Approved for Release @ 50-Yr 2014/05/14 : CIA-RDP81-01043R004600130010-2

On compass duty, the pointer deflecting from zero indicates the deflection of the aircraft from its course. On an inbound course, left or right deflection of the aircraft from its course causes corresponding left or right deflection of the pointer. On an outbound course the deflections of the aircraft and the pointer are reverse.

On TFI duty, the pointer deflects to one of the extreme scale positions and shows the position of the aircraft relative to the radio station. If the pointer coincides with the miniature aircraft headed to the middle of the scale (at the left) the station is in front; in the reverse position of the pointer, the station is behind. At the moment of flight over the range station or across its beacon the pointer swings over from left to right.

The signal device is a lamp with a red filter connected by a cord with the course-TF indicator. Changing over to TFI duty flashes the red light on; in all other cases it is off.

6. Rotary Convertor

The rotary convertor converts the mains voltage into high voltage for supplying the PПKO-10M radio compass and to - from indicator.

To reduce noise, the convertor is provided with a filter manufactured in an aluminium box which has a four-pin connector for the cable on its side and a terminal for earthing to the aircraft metalwork on its top.

Inside the box are mounted fixed condensers and MF and LF chokes.

Declassified in Part - Sanitized Copy Approved for Release @ 50-Yr 2014/05/14 : CIA-RDP81-01043R004600130010-2

Declassified in Part - Sanitized Copy Approved for Release @ 50-Yr 2014/05/14 : CIA-RDP81-01043R004600130010-2

7. Loop

The loop aerial consists of two mutually perpendicular inductance coils shielded with a static shield and wound on an alsifer magnetodielectric. (Alsifer -- aluminium, silicon and iron powder alloy). The RC loop winding consists of 16.5 turns. The TFI loop winding is contained within the RC loop and comprises 9 turns.

The planes of the RC and TFI loops are strictly perpendicular to one another.

The combination loop is enclosed in a chlorvinyl damp-proof envelope and has a metal base rigidly connected with the box containing a standard relay used for switching over the loops. The side panel of the relay box carries a connector cable. The 26 V supply is conducted to the relay by two shielded wires of the loop cable.

W A R N I N G !

During service, never drop any petrol, kerosene or oil on the chlorvinyl surface for fear of damaging it.

Depending on the site of loop installation on the plane, the RC-TFI is furnished with a loop for top or bottom mounting. The loop should be installed exactly along the fore and aft line of the aircraft, according to the markings "ПЕРЕД" (FRONT), B (TOP), H (BOTTOM), $\frac{B}{H}$ and $\frac{H}{B}$.

"ПЕРЕД" shows the heading of the loop when installed.

B -- the loop and open aerial are installed on top of the fuselage.

H -- loop and open aerial mounted beneath the fuselage.

$\frac{B}{H}$ -- loop installed at the top and aerial at the

Declassified in Part - Sanitized Copy Approved for Release @ 50-Yr 2014/05/14 : CIA-RDP81-01043R004600130010-2

Declassified in Part - Sanitized Copy Approved for Release @ 50-Yr 2014/05/14 : CIA-RDP81-01043R004600130010-2

bottom of the fuselage.

$\frac{H}{B}$ -- loop mounted beneath an aerial on top of the fuselage.

When replacing a lopp marked H with a loop marked B, reverse the ends of the "РПК" (RC) winding. When replacing a loop marked $\frac{H}{B}$ with a loop marked $\frac{B}{H}$ do the same. When replacing a loop marked B with a loop marked $\frac{H}{B}$ reverse the ends of the winding marked "PO" (TFI). When replacing a loop marked H with one marked $\frac{B}{H}$ do the same.

When replacing a B loop with a $\frac{B}{H}$ loop, or an H loop for $\frac{H}{B}$, reverse the windings РПК and PO.

NOTES:

1. The РПК and PO loop leads are marked as follows:

Red -- beginning of РПК winding

White -- end of РПК winding

Blue -- beginning of PO winding

Green -- end of PO winding

2. Do not open the chlorvinyl sheathing or take the loop off the base, otherwise the loop parameters will alter.

8. Type ИКО-42 Switch Box

The switch box is designed for training aircraft only and serves to alternately switch on the course indicators of the pilot and cadet.

The main parts of the switch box are:

a) Aluminium box with three eight-pin cable connectors on its side;

b) switch for three positions: "1-й ИНДИКАТОР" (1st indicator) "2-й ИНДИКАТОР" (2nd indicator) and "ЩИТОК" (panel).

Declassified in Part - Sanitized Copy Approved for Release @ 50-Yr 2014/05/14 : CIA-RDP81-01043R004600130010-2

Declassified in Part - Sanitized Copy Approved for Release @ 50-Yr 2014/05/14 : CIA-RDP81-01043R004600130010-2

9. Shock-Mounting

The shock-mounting includes the following parts:

1) metal frame;

2) hinges fixing the frame to the receiver case;

3) type "271C2-6" rubber shock-absorbers.

The radio compass with its shock-mounting are fixed so as to provide free movement of the shock-absorbers. The shock-mounting protects the receiver from external mechanical shocks.

10. Cables

The cables of the radio compass and TF indicator have double shielded metal plaiting. An exception is the cable running to the RC-TFI tumbler.

The first layer of the plaiting is a flexible spiral of aluminium and the second a stocking of woven tinned copper wires. The ends of the conductors contained in the sheathing are soldered at both sides to the shoe sockets. The shoe is encased in a metal holder provided with a nut which is screwed on to the sleeve of the respective connector sleeve with pins. The pins, when inserted into the shoe sockets, provide reliable contact. The cable connecting the receiver with the rotary convertor is somewhat different in design. Its connection with the cable running to the RC-TFI tumbler is effected by a T-piece.

РПКО-10М sets may employ cables from 500 to 6000 mm long.

Loop cables shorter than 4500 mm have an external diameter of 13.9 mm.

Loop cables longer than 4500 mm are distinguished by more complex design and have an external diameter of 20 mm.

Declassified in Part - Sanitized Copy Approved for Release @ 50-Yr 2014/05/14 : CIA-RDP81-01043R004600130010-2

Declassified in Part - Sanitized Copy Approved for Release @ 50-Yr 2014/05/14 : CIA-RDP81-01043R004600130010-2

Loop cables of identical labelling are interchangeable provided that the marking is strictly observed.

The length of cables in the set is determined by the type of aircraft to be equipped with the device.

Rejector Lead-in

The rejector lead-in consists of a four-section bifillary winding on a core of twisted cotton yarn. The winding has a linoxine lamination the ends of which are provided with clamps. The lead-in is connected to the РСИ (aircraft radio) aerial or РПК loop terminals by two outlets, one long and the other short. The rejector lead-in employed for conjoint operation of the radio compass with the aircraft radio station is a filter separating the lead-ins of the radio station aerial and the loop of the RC, and prevents a decrease of the station's sensitivity when operating through a common aerial with the compass. In this case the sensitivity of the RC is 1.5-2 times worse.

The rejector lead-in is connected by its short end to the "РСИ" terminal, and by its long end to terminal "РПК". The longer end may be shortened depending on the distance between the said two devices.

§ 5. Principle of Operation

1. Principle of RC Operation

The radio compass is designed for course flying. The basic principle of operation is the conjoint use of the properties of a loop (directional aerial) and a conventional (non-directional, or open) aerial. The device is a superheterodyne receiver supplemented by a loop signal amplifier stage and phase commutator.

A simplified diagram of the phase commutator is shown in Fig.1

Declassified in Part - Sanitized Copy Approved for Release @ 50-Yr 2014/05/14 : CIA-RDP81-01043R004600130010-2

Declassified in Part - Sanitized Copy Approved for Release @ 50-Yr 2014/05/14 : CIA-RDP81-01043R004600130010-2

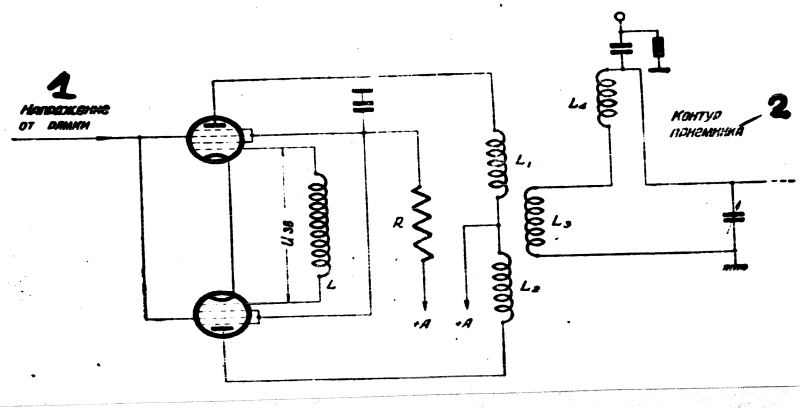

Fig.1

1 - Voltage from loop; 2 - Receiver circuit;
R - Balanced modulator screen dropping resistor;
L - Fixed winding of course-to-from indicator;
L_1, L_2 - BM anode circuit coils inductively coupled with receiver input circuit;
L_3, L_4 - receiver input coils.

Fig.2 shows the reception diagrams of loop B shaped as a figure of eight, non-directional aerial A shaped as a circle and the resultant curve C shaped as a cardioid. When the

Declassified in Part - Sanitized Copy Approved for Release @ 50-Yr 2014/05/14 : CIA-RDP81-01043R004600130010-2

Declassified in Part - Sanitized Copy Approved for Release @ 50-Yr 2014/05/14 : CIA-RDP81-01043R004600130010-2

loop plane is set perpendicular to the direction of the range station no signal is received on the loop.

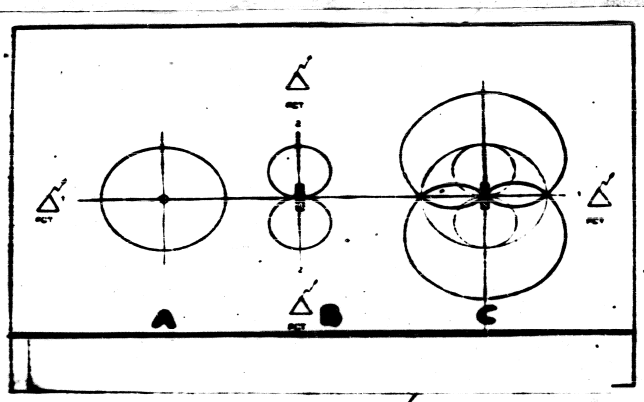

Fig.2
Directivity Diagrams

Declassified in Part - Sanitized Copy Approved for Release @ 50-Yr 2014/05/14 : CIA-RDP81-01043R004600130010-2

Declassified in Part - Sanitized Copy Approved for Release @ 50-Yr 2014/05/14 : CIA-RDP81-01043R004600130010-2

When the loop deflects to the right or left of its null position (corresponding to changes in the aircraft course) an electromotive force is induced in it. The value of this force increases proportionally with the deflection and reaches maximum at a deflection of 90°, i.e. when the direction of the loop plane coincides with the direction to the radio station. Right or left deflection of the loop from zero sets up electromotive forces with a phase difference of 180°. The signal received by the loop is fed to the receiver input through the loop amplifier and a special commutating device called a balanced modulator, which periodically, with the frequency of the audio-oscillator (60-65 c.p.s.) controlling the balanced modulator valves, introduces a 180° change into the phase of the voltage delivered from the loop to the receiver input.

Simultaneously with the voltage delivered from the loop, the receiver input is also fed with voltage from the non-directional aerial. In the receiver aerial circuit the signals received by the loop and by the non-directional aerial are alternately added (when their phases coincide) and subtracted (when their phases differ by 180°). In other words the cardioid, as it were, swings 180° with sound oscillator commutation frequency.

Thus, the resultant voltage at the receiver input is amplitude-modulated (i.e. varies in amplitude) with the frequency of commutation.

Fig.3 is a graphic presentation of these processes for cases when the loop is in the position of aural null (Fig. 3B), or deflected to the right (Fig.3C) or left (Fig.3A).

Declassified in Part - Sanitized Copy Approved for Release @ 50-Yr 2014/05/14 : CIA-RDP81-01043R004600130010-2

Declassified in Part - Sanitized Copy Approved for Release @ 50-Yr 2014/05/14 : CIA-RDP81-01043R004600130010-2

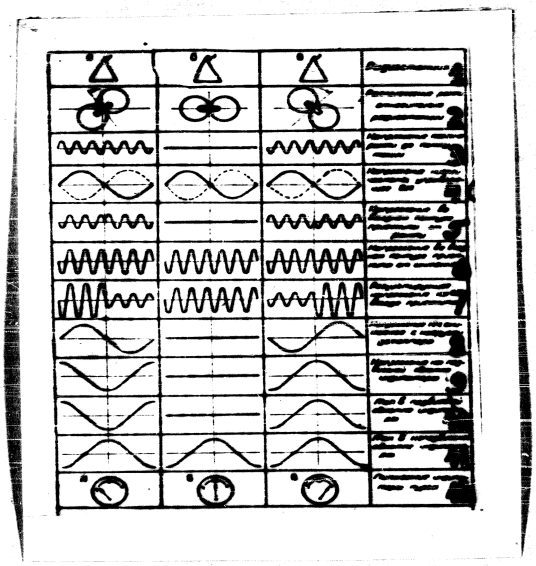

Fig.3

Phase relationships in radio compass circuits

1 - Radio station; 2 - Loop position relative to radio station; 3 - Loop channel voltage before commutation; 4 - LF voltage controlling the balanced modulator; 5 - Voltage from loop in receiver input circuit; 6 - Voltage from aerial in receiver input circuit; 7 - Resultant voltage on receiver input; 8 - LF voltage picked up from detector load; 9 - Voltage on indicator moving winding; 10 - current in indicator moving winding; 11 - Current in indicator fixed winding; 12 - Course indicator readings.

Declassified in Part - Sanitized Copy Approved for Release @ 50-Yr 2014/05/14 : CIA-RDP81-01043R004600130010-2

Declassified in Part - Sanitized Copy Approved for Release @ 50-Yr 2014/05/14 : CIA-RDP81-01043R004600130010-2

The voltage from the receiver output is fed to the moving winding of the course indicator which is a ferrodynamic device. The fixed winding of the indicator receives a voltage alternating at commutation frequency (60-65 c.p.s.) because the said winding is used as an inductance in the tuned circuit of the LF generator controlling the valves of the balanced modulator.

If the currents in both windings of the balanced modulator are phase-coincident (their frequencies are equal) the pointer will deflect in one direction, and if the currents are opposite in phase, it will deflect in the other.

THREE POSSIBLE LOOP POSITIONS

1. Loop in Position of Aural Null

(Aircraft on an Inbound Course)

Fig.3 shows that in this case the voltage applied to the moving winding of the device is at null. Consequently, the course indicator pointer will show null.

2. Loop Deflected Right of the Aural Null

Fig.3C shows that in this case the moving and fixed windings of the device are fed with phase-coincident voltages.

The force of interaction between the windings will deflect the meter pointer to the right.

3. Loop Deflected Left of the Aural Null

Fig.3A shows that in this case the fixed and moving windings of the device receive voltages with a phase difference of 180° due to which the force of interaction between the windings is directed opposite to the preceding. The pointer will deflect to the left.

Declassified in Part - Sanitized Copy Approved for Release @ 50-Yr 2014/05/14 : CIA-RDP81-01043R004600130010-2

Declassified in Part - Sanitized Copy Approved for Release @ 50-Yr 2014/05/14 : CIA-RDP81-01043R004600130010-2

The loop reception diagram shows that null (or minimum) reception occurs in two loop positions differing by 180°. The first minimum corresponds to inbound and the second to outbound flight. When the loop (i.e., the aircraft) deflects from the direction of the first minimum (flying to the station) the pointer of the course indicator deflects in the same direction, but when the loop, i.e., the aircraft, deflects from the second minimum (flying from the station) the deflection of the needle will be opposite to that of the aircraft. This rule should be used in determining the heading relative to the radio station.

Principle of TFI Operation

The to - from indicator is used to indicate the exact moment of flight over the radio station or across its beam.

This moment is determined by means of the loop headed in the direction of aural maximum, i.e. with its plane directed along the plane head. At the moment of passing the voltage picked up by the loop changes its phase by 180° on account of the changed direction of the magnetic lines of force relative to the loop (see Fig.4).

This effect is used by the radio compass and TF indicator to indicate the moment of flight over the radio station.

The loop together with the non-directional aerial are included in the circuit of the radio compass.

As long as the aircraft is flying towards the station a voltage of definite phase is induced in the loop. This voltage is applied to the receiver input through a special commutating device which periodically, with the frequency of the audio oscillator controlling the balanced modulator valves, changes

Declassified in Part - Sanitized Copy Approved for Release @ 50-Yr 2014/05/14 : CIA-RDP81-01043R004600130010-2

Declassified in Part - Sanitized Copy Approved for Release @ 50-Yr 2014/05/14 : CIA-RDP81-01043R004600130010-2

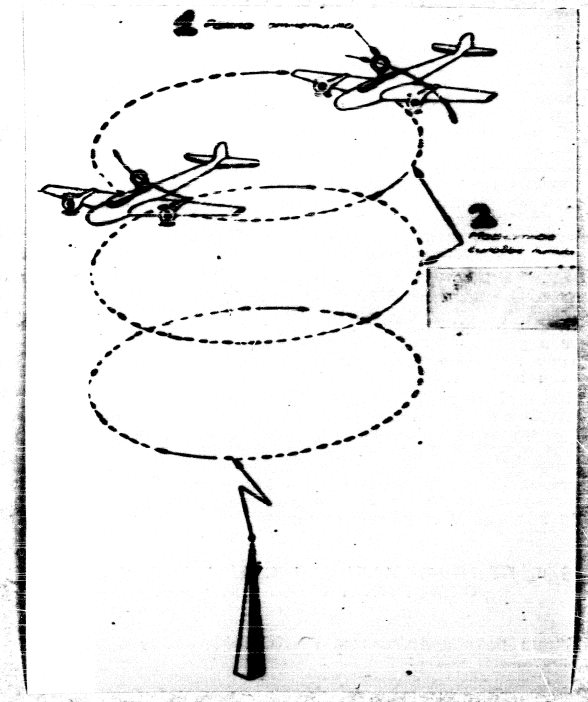

Fig.4

1 - Jet loop; 2 - Magnetic lines of force.

Declassified in Part - Sanitized Copy Approved for Release @ 50-Yr 2014/05/14 : CIA-RDP81-01043R004600130010-2

Declassified in Part - Sanitized Copy Approved for Release @ 50-Yr 2014/05/14 : CIA-RDP81-01043R004600130010-2

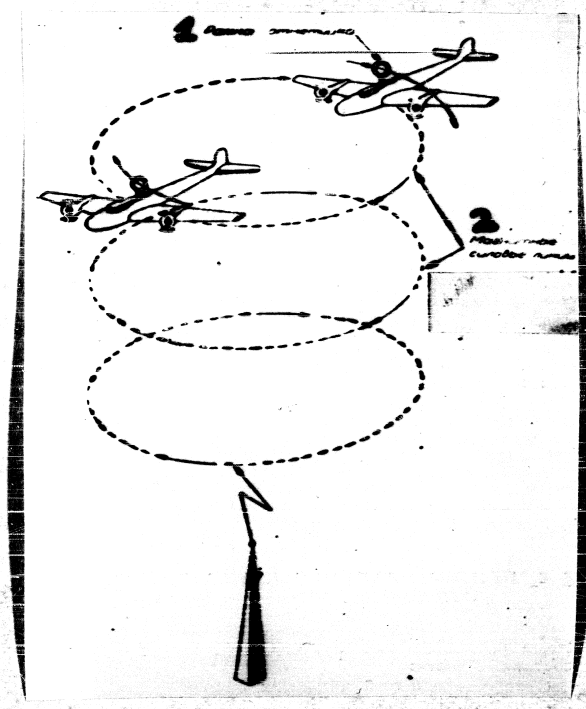

Fig.4

1 - Jet loop; 2 - Magnetic lines of force.

Declassified in Part - Sanitized Copy Approved for Release @ 50-Yr 2014/05/14 : CIA-RDP81-01043R004600130010-2

Declassified in Part - Sanitized Copy Approved for Release @ 50-Yr 2014/05/14 : CIA-RDP81-01043R004600130010-2

by 180° the phase of the voltage delivered from the loop to the receiver input. Together with the voltage delivered from the loop the receiver input receives voltage from the non-directional aerial. The resultant voltage at the receiver input is thus amplitude-modulated with the frequency of commutation. Just as it does in the conventional RC, this voltage passing through the entire receiver to the indicator, deflects the latter's pointer all the way left (which means that the aircraft is flying towards the radio station). As soon as the plane passes the station, the phase of the voltage induced in the loop will change, consequently changing the modulation phase of the voltage at the receiver input and the phase of the low frequency voltage applied to the moving winding of the course indicator. Due to this, when the aircraft passes the radio station, the to - from indicator pointer will swing from the extreme left to the extreme right position (which means that the aircraft has passed the radio station and is flying away from it). The time required by the pointer to swing over from one stop to the other during flight over the station or near it is 3-5 seconds. As the distance from the station increases, the rate of swing--over decreases and at 50-60 km it becomes so slow that orientation is not sufficiently accurate.

As seen from the above principle of TFI duty the latter is similar in all main details with RC duty. The difference lies in the different position of the loop relative to the aircraft longitudinal axis. Hence, the use of the Course and TP indicator is governed by different rules. In RC duty orientation is provided by the deflection of the pointer from zero, the latter being the working position of the pointer.

Declassified in Part - Sanitized Copy Approved for Release @ 50-Yr 2014/05/14 : CIA-RDP81-01043R004600130010-2

Declassified in Part - Sanitized Copy Approved for Release @ 50-Yr 2014/05/14 : CIA-RDP81-01043R004600130010-2

On TFI duty, orientation is provided by the pointer swing-over, the working position of the pointer being at one of the two stops. Owing to such uniformity in the functions of the main stages of the RC and TFI, in the type PΠKO-10M device they are united in a single unit, their operation being alternate, i.e., it is enough by means of the tumbler to switch over from one loop to the other (normal to the first) and the entire device changes over from RC to RFI duty, flashing on the red pilot light.

§ 6. Circuit Diagram (See Appendix 2)

The circuit of the type PΠKO-10M device may be divided into the following main parts:

1. Superheterodyne receiver.
2. Loop signal amplifying stage.
3. Phase commutator and low frequency heterodyne.

I. The superheterodyne receiver has the following stages:

a) high-frequency amplifying stage (employing type 6K7 valve No.46);

b) frequency convertor (employing type 6A8 valve No.53);

c) first intermediate-frequency amplifying stage and local modulation frequency oscillator (employing type 6A8 valve No.70);

d) second intermediate-frequency amplifying stage (employing type 6K7 valve No.90);

e) second detector, first low-frequency amplifying stage (employing type 6Г7 valve No.113);

f) second low-frequency amplifying stage (employing type 6K7 valve No.120).

Declassified in Part - Sanitized Copy Approved for Release @ 50-Yr 2014/05/14 : CIA-RDP81-01043R004600130010-2

Declassified in Part - Sanitized Copy Approved for Release @ 50-Yr 2014/05/14 : CIA-RDP81-01043R004600130010-2

When using the device as a RC or TFI the following components are inserted additionally: loop channel low-frequency amplifier, balanced modulator with low-frequency generator and automatic sensitivity control /АРЧ (ASC)/.

II. The loop channel high-frequency amplifier uses type 6K7 valve No.5 and is an amplifier with inductance-capacity coupling. The voltage from the loop channel amplifier is delivered to the valve grids of the balanced modulator.

III. The balanced modulator (phase commutator) uses two type 6A8 valves Nos.21 and 22, the triodes of which are employed as a push-pull low-frequency heterodyne controlling the grids of the balanced modulator. The heterodyne resonant circuit consists of the course indicator fixed winding and 0.25 mf condensor 147, operating on frequency of 60-65 c.p.s. The tetrodes of valves 21 and 22 are used as a two-arm amplifier inductively coupled with the receiver input circuit.

IV. Operation of the ASC. The receiver employs a delayed automatic sensitivity control circuit. The ASC operates only in position K. In absence of signals to the right diode anode of the type 6Г7 valve (see appendix No.2) is applied a negative voltage equalling the total voltage drop across resistances 108, 165, 109 and 124, and the diode does not conduct current. The receiver valves receive initial bias from resistance No.124. When the signal value exceeds the delay voltage, current will flow through the diode setting up a negative voltage across resistor No.166. Through decoupling resistor 103 this voltage is applied to the valve grids adding to the initial bias and reducing receiver gain.

Declassified in Part - Sanitized Copy Approved for Release @ 50-Yr 2014/05/14 : CIA-RDP81-01043R004600130010-2

Declassified in Part - Sanitized Copy Approved for Release @ 50-Yr 2014/05/14 : CIA-RDP81-01043R004600130010-2

V. Reception of unmodulated beacons.

The conditions for reception of unmodulated beacons (duty selector at MH) are identical with the reception conditions outlined in the paragraph "Reception of Modulated Beacon or Broadcasting Stations" except that in the former case the received signals are modulated by the local low-frequency oscillator (in the order of 500-100 c.p.s.). Modulation is effected in type 6A8 valve No.70 whose triode section operates as an audio--oscillator. Volume control is carried out as in MM duty -- by variable resistor No.137.

VI. Compass duty. Compass duty is carried out with the duty selector in position K and the RC-TFI tumbler in position PTK (RC). This cuts in the loop channel and starts the ASC. The voltage induced in the loop is amplified in the loop channel high-frequency amplifying stage and through the balanced modulator is delivered to the aerial circuit. The low--frequency oscillator alternately cuts off the valves of the balanced modulator, owing to which the voltage delivered from the loop will add to the voltage from the aerial during one half-cycle of commutation frequency and subtract from it during the next half-cycle. The resulting signal induced in the aerial circuit will change in amplitude with the frequency of loop signal phase commutation. After the signal is amplified in the high-frequency and intermediate-frequency stages and goes through the detection process, voltage obtained with a frequency of 60-65 c.p.s. (commutation frequency) is further amplified by the valves of the low-frequency amplifier. In compass duty 0.5 mf condenser No.131 is connected in parallel with the output transformer primary which creates a resonant circuit tuned to a frequency of the order of 50 c.p.s. Simultaneously, condenser No.132 is cut in, which is necessary to obtain the required

Declassified in Part - Sanitized Copy Approved for Release @ 50-Yr 2014/05/14 : CIA-RDP81-01043R004600130010-2

Declassified in Part - Sanitized Copy Approved for Release @ 50-Yr 2014/05/14 : CIA-RDP81-01043R004600130010-2

low-frequency phasing, while condenser No.116 is short-circuited.

The amplified low-frequency voltage (approximately 60-65 c.p.s.) is applied to the moving winding of the course indicator.

Depending on the loop position relative to the radio station, the current in the moving winding of the course indicator will be coincident or opposite in phase with the current in the fixed winding, which will deflect the needle to the right or left.

Connected in series with the moving winding of the course indicator is variable resistor No.137 whose value may be changed by rotating the handle "РЕГУЛЯТОР" (control) on the control panel.

This resistance controls the value of current flowing in the fixed winding of the course indicator, and thus controls the angular sensitivity of the RC. With the Duty switch at MM or MH this variable resistor adjusts the bias of the compass valves and in this manner acts as a volume control.

Maximum angular sensitivity of the RC (position K) as well as maximum volume in the headphones (position MM and MH) is achieved with the control handle turned all the way counter-clockwise.

VII. <u>To - From indicator duty</u>. This is carried out with the duty selector at K and the RC-TFI (РПК-РО) tumbler at PO. Otherwise, all the stages operate the same as in compass duty.

VIII. <u>Receiver supply</u>. The anode and screen grid circuits of the device are supplied from a type РУ-11АМ rotary convertor which is a common-armature two-pole convertor, converting low-voltage d.c. into high-voltage d.c.

Declassified in Part - Sanitized Copy Approved for Release @ 50-Yr 2014/05/14 : CIA-RDP81-01043R004600130010-2

Declassified in Part - Sanitized Copy Approved for Release @ 50-Yr 2014/05/14 : CIA-RDP81-01043R004600130010-2

The low- and high-voltage windings are laid in the same armature slots and are connected to two commutators: a low-voltage commutator -- for connection to the supply mains and a high-voltage commutator supplying the hgih-voltage. The low- and high-voltage windings have a common magnetic system excited by the shunt winding, connected to the low-voltage source. The convertor armature rotates clockwise (when viewed from the low-voltage commutator). The high-voltage circuit of the convertor is provided with LF and HF filters which smooth out pulsation and eliminate interference to radio reception. The circuit of the convertor and its filters is shown in the diagram of the compass.

The low-frequency filter consists of core-type choke 155 and high-capacity paper condensers 150, 151 and 168. The high-frequency filter consists of high-frequency choke 154 and paper condensers Nos.158 and 159.

To eliminate electric noise from the side of the low-voltage commutator, the supply circuit of the convertor is provided with a high-frequency filter which protects the supply source from noise. The filter consists of two high-frequency chokes Nos.152 and 153 and paper condensers 140, 156, 157 and 169.

The receiver filament circuits are supplied with 26 volts. Since the filaments of the metal valves employed in the device are designed to operate on 6.3 volts, the filaments are connected in groups in such a way that each filament receives a voltage close to the rated value (see valve filament circuit diagram, Appendix No.2).

The filament of valve No.53 in the frequency convertor is connected directly to the 26 volt mains through the 65-ohm damping resistance No.161. The filaments of high-

Declassified in Part - Sanitized Copy Approved for Release @ 50-Yr 2014/05/14 : CIA-RDP81-01043R004600130010-2

Declassified in Part - Sanitized Copy Approved for Release @ 50-Yr 2014/05/14 : CIA-RDP81-01043R004600130010-2

-frequency valves No.5, 21, 22 and 46 are blocked by condensers Nos.133 and 160 whose purpose is to protect these valves from high-frequency noise.

§ 7. Pre-Installation Check-Up

Before installation on aircraft the РПКО-10М set must be tested for correct operation.

This requires the use of a standard signal generator (type ГС-3 or ГСС-6) and a long line (see Appendix No.3).

In absence of a special long line and standard signal generator the operation test may be carried out by tuning to a powerful radio station.

1. Preparation for Operation Test

Prior to the test, inspect the entire se r absence of external damage, correct marking, station numbers on receiver and remote control, and conformity of the panel, loop and cables with the lettering. Connect the entire set, connecting the cables in compliance with the dimensional and wiring diagram, (Appendix No.1) making sure that the cable junctions fit freely and screw together easily. Connect the tuning control to the receiver by the flexible shaft. Check whether the remote control with the flexible shaft carry out tuning smoothly and freely, without jerking and jamming.

2. Operation Test

Connect the receiver to a 26 V supply source. Set the duty selector to position K and the RC-TFI tumbler to РПК (RC).

Tune the device to the frequency of the standard signal generator or to a radio station, working for minimum deflection of the tuning indicator and rotating the remote control handle. Turning the loop left or right of the aural null, check whether the course -- TF indicator needle deflects and

Declassified in Part - Sanitized Copy Approved for Release @ 50-Yr 2014/05/14 : CIA-RDP81-01043R004600130010-2

Declassified in Part - Sanitized Copy Approved for Release @ 50-Yr 2014/05/14 : CIA-RDP81-01043R004600130010-2

note whether it deflects correctly. If the fore side of the loop (marked "ПЕРЕД") faces the radio station (or standard signal generator) its right or left deflection should be followed by identical deflection of the pointer.

To check the TFI, the RC-TFI tumbler is set to PO (TFI), the duty selector at K. This causes the relay to operate (a specific click is heard) and flashes on the pilot lamp. When checking angular sensitivity, turn the loop 90° from its null position in RC duty. This loop position will correspond to null in TFI duty.

The direction of pointer deflection for a top-mounted loop (labelled B) should correspond to the requirements for a loop pointed at the radio station or signal generator -- the pointer must deflect towards the miniature aircarft flying towards the middle of the scale indicating flight towards the station. With the rear side of the loop pointed at the radio station, the pointer should deflect towards the miniature aircraft flying away from the middle of the scale, indicating flight from the station. The same rule is valid for loops labelled H, $\frac{H}{B}$, and $\frac{B}{H}$, if installed in compliance with the labelling.

With the selector switch at MM and MH check signal audibility in the headphones. Check whether the receiver wiring is made securely. Lightly tapping the receiver case, see that there is no crackling in the headphones and no noticeable weakening of signal during tapping.

5. Operation Test for Conjoint Operation with Aircraft Radio Station

When testing a type РИХО-10М set designed for conjoint operation with the aircraft radio station (РСИ), the control panel is connected to the aircraft mains through the type РУ-47А rotary converter (see connection diagram in Appendix No.4).

Declassified in Part - Sanitized Copy Approved for Release @ 50-Yr 2014/05/14 : CIA-RDP81-01043R004600130010-2

Declassified in Part - Sanitized Copy Approved for Release @ 50-Yr 2014/05/14 : CIA-RDP81-01043R004600130010-2

The set is submitted to the following additional checks:

a) Connect the sockets labelled "ПРИЕМ" (reception) with the output sockets of the РСИ (aircraft radio) receiver by means of a cord. With the selector at K and "ПРИЕМ" (ПРМ) the signals received by the aircraft receiver must be audible.

b) In position "ПРД" (transmission) power is disconnected from the РПКО-10М device and the РСИ transmitter is switched on.

If the set complies with all requirements it may be installed on the aircraft.

Besides the aforesaid conventional operation test, if a special long line, standard signal generator, output meter and supply panel are available, the angular sensitivity of the compass and TFI and the sensitivity of the receiver may be checked by the following procedure:

a) Measurement of RC Angular Sensitivity

The angular sensitivity of the compass is measured with the duty selector at K and RC-TFI tumbler set to РПК (RC) at frequencies of 275, 500 and 725 kc, by means of a long line. For this purpose the standard signal generator feeds the long line with a signal corresponding to field intensity of 50 microvolts per metre, the device being tuned to the signal frequency with the help of the tuning indicator. After that the output voltage of the standard signal generator is reduced to a value corresponding to a field intensity of 20 microvolts per metre.

To determine angular sensitivity rotate the loop, checking on the 360° tester scale the loop rotation angle required to deflect the course indicator pointer all the way left or right.

Declassified in Part - Sanitized Copy Approved for Release @ 50-Yr 2014/05/14 : CIA-RDP81-01043R004600130010-2

Declassified in Part - Sanitized Copy Approved for Release @ 50-Yr 2014/05/14 : CIA-RDP81-01043R004600130010-2

The value of this angle divided by two will determine the angular sensitivity of the radio compass.

The measurements are also carried out with signals corresponding to field intensities of 50 microvolts and 0.1 volt per metre. The angular sensitivity of a correctly operating RC must lie within the limits of 3-30°, provided the following conditions are observed:

the supply voltage should be 26 V;

the manual volume control should be turned all the way to the right.

b) Measurement of TFI Angular Sensitivity

The angular sensitivity of the TFI is also measured by means of a long line with the duty selector at K and the RC-TFI tumbler at PO (TFI), on frequencies of 275, 500 and 725 kc.p.s. For this purpose, a signal corresponding to 10 microvolts per metre field intensity is fed to the long line, tuning the device to signal frequency with the help of the tuning indicator.

Angular sensitivity is determined by rotating the loop and noticing on the 360° scale the angle necessary to deflect the course indicator needle all the way from left to right.

One half of this angle will determine the angular sensitivity of the given RC-TFI.

c) Measurement of Receiver Sensitivity

Receiver sensitivity is measured at frequencies of 275, 500 and 725 kc, with the duty selector at MM (modulated beacon) and MH (unmodulated beacon). The dummy aerial employed for this purpose, for an РПКО-10М device operating together with a РСИ aircraft radio station, consists of a 50 pf capacitance inserted in series with the receiver input, and a 90 pf

Declassified in Part - Sanitized Copy Approved for Release @ 50-Yr 2014/05/14 : CIA-RDP81-01043R004600130010-2

Declassified in Part - Sanitized Copy Approved for Release @ 50-Yr 2014/05/14 : CIA-RDP81-01043R004600130010-2

capacitance inserted in parallel with the receiver input; for the same device working without the RCИ the dummy aerial consists of a 50 pf capacitance inserted in series with the receiver input and a 20 pf capacitance inserted in parallel with the receiver input. Through this dummy aerial the voltage from the standard signal generator is applied to the receiver input, a type ИВ-6 or ИВ-8 voltmeter being connected to the output in parallel with the headphones for measuring the output voltage.

The output voltmeter is referred to when tuning the RC to signal frequency, after which the standard signal generator is switched off. If the output voltmeter indicates an output noise voltage in excess of 2 volts, the latter is brought down to 2 volts by means of the manual volume control on the control panel. After that the standard signal generator is switched on again and adjusted to deliver such a signal level through the dummy aerial at which the RC output voltage equals 15 volts.

The value of the signal delivered from the signal generator will characterize the sensitivity of the RC receiver. When measuring sensitivity in MM duty, the signal must be modulated by a frequency of 400 c.p.s. with a modulation precentage of 30%. Sensitivity in this case must be 10-12 microvolts.

§ 8. Installation on Aircraft

After preliminary operation tests are completed, the equipment is installed on the aircraft, if in good condition.

Remember the following when installing it on aircraft.

a) Shielding Requirements

Effective use of the RC in flight depends on the quality of shielding and the elimination of interference originated in the plane's electric equipment.

The sources of electric noise are the following: engine ignition system, generator with control and distribution

Declassified in Part - Sanitized Copy Approved for Release @ 50-Yr 2014/05/14 : CIA-RDP81-01043R004600130010-2

Declassified in Part - Sanitized Copy Approved for Release @ 50-Yr 2014/05/14 : CIA-RDP81-01043R004600130010-2

box (PK) and the ramified aircraft mains. Electric noise is reduced to minimum ny maintaining in a good condition the circuits which are the sources of noise. Good condition of cable sheathing and generator filters, as well as proper bonding of aircraft parts serve the same cause. The flexible shaft and the the cables must be so arranged and fixed on the aircraft sides that no intermittent contacts should occur due to vibration. An intermittent contact caused by cables touching one another or various parts of the aircraft, increases the electric noise at the RC receiver output.

b) Loop Installation

To install a type РМД loop in the place assigned for it on the given type of aircraft, a rectangular cut-out at least 285 x 145 mm is made in the plating.

The longer side of the cut-out must be strictly parallel to the aircraft centre-line. A special pan-shaped mounting with sloping edges (Appendix No.1) is manufactured for attaching the loop to the aircraft.

NOTE:

The depth of the pan-shaped mounting for each type of aircraft is chosen separately, in compliance with the requirements outlined in §8 (b).

The inner dimensions of the flat bottom of the mounting should be not less than 260 x 123 mm. The mounting may be manufactured as a separate solid or firmly riveted unit which is firmly attached to the fuselage to ensure electric contact.

2. The mounting should fit the fuselage cut-out and be fixed so that the centre-line of the mounting and that of type РМД loop, installed in it, should be parallel to the

Declassified in Part - Sanitized Copy Approved for Release @ 50-Yr 2014/05/14 : CIA-RDP81-01043R004600130010-2

Declassified in Part - Sanitized Copy Approved for Release @ 50-Yr 2014/05/14 : CIA-RDP81-01043R004600130010-2

fore and aft line of the aircraft.

3. The loop is placed horizontally in the depression, with its fore side labelled "ПЕРЕД" facing the aircraft nose.

4. The loop should not be sunk in the fuselage, but, if possible, mounted flush with it. Sinking the loop in the fuselage decreases angular sensitivity and reduces the effective range of the radio compass. The maximum gap between the upper surfaces of the loop and fuselage is 5 mm along the entire surface of the depression. The mount, rigidly sitting under the bottom of the loop, should form a continuous flat surface with the fuselage. Electric contact between the mount and fuselage should never be broken.

5. The mount should allow the loop an angular deflection of $\pm 5^{\circ}$ from the aircraft centre-line. For this purpose the fastening cut-outs must have curved slots.

6. The upper posrt of the depression is covered with thin flat insulating material, e.g., plexiglass, laminated insulation, textolite or plywood.

The minimum desirable thickness of insulation is 2-4 mm. By no means cover the cut-out with metal sheets.

7. The loop is connected to the radio compass by the loop cable with a maximum length of 4.5 metres. If greater length is required, use cable of special design.

In any case, the cable length should not exceed 6 metres.

Type РМД loop is not interchangeable with the open loop manufactured previously.

The choice of aerial is governed by the angular sensitivity of the radio compass and the accuracy of the TFI.

Declassified in Part - Sanitized Copy Approved for Release @ 50-Yr 2014/05/14 : CIA-RDP81-01043R004600130010-2

Declassified in Part - Sanitized Copy Approved for Release @ 50-Yr 2014/05/14 : CIA-RDP81-01043R004600130010-2

If, after installing the aerial and its lead-in, the angular sensitivity of the radio compass in the direct vicinity (1-2 km) of a type ПАР radio station proves less than 4 degrees, either increase the dimensions of the aerial (if possible) or reduce the capacity of the aerial lead-in. When angular sensitivity falls to 18-20° reduce the dimensions of the aerial.

c) Receiver Installation

Prior to installing the receiver, prepare a shelf which will support the receiver's shock-absorbing frame.

The receiver is placed into this frame and fixed by two snap-locks. When dismantling, only the receiver is taken off; the shock-mounting remains on the aircraft. The receiver may be installed at a distance from the operator.

d) Control Panel Installation

The site for the control panel is chosen so as to facilitate operation of the equipment and observation of the tuning indicator and depends on the length of the cables.

e) Remote Tuning Control (Transmitter) Installation

The receiver tuning remote control should be installed in a place easily accessible for tuning the receiver, the scale being well visible to the operator.

f) Course-TF Indicator Installation

The course-TF indicator should be installed among the navigating instruments on the instrument panel and as far as possible from the magnetic compass (with approximately 15-20 cm between their centres). Such separation of the course indicator and the magnetic compass is required to ensure normal operation of the magnetic compass.

g) Installation of Signal Device

The signal lamp should be also placed on the instrument board next to the course indicator.

Declassified in Part - Sanitized Copy Approved for Release @ 50-Yr 2014/05/14 : CIA-RDP81-01043R004600130010-2

Declassified in Part - Sanitized Copy Approved for Release @ 50-Yr 2014/05/14 : CIA-RDP81-01043R004600130010-2

h) Installation of Tumbler

The tumbler switching over the RC and TFI should be installed in a position convenient for its operation.

i) Installation of Cables and Flexible Shaft

The cables and flexible shaft should be mounted after all the other parts of the РПКО-10М are fixed. The cables should be fixed rigidly with clips after every 20-30 cm.

To avoid encumbering the rotation of the flexible shaft, the radius of its bend should be not less than 120 mm.

§ 9. Post-Installation Check

After installing the РПКО-10М device on the aircraft, check the correctness of all connections and test it for reliable operation.

a) Check whether all cable and the flexible shaft connectors are properly tightened.

b) Check the correct connection of the cables according to the labels on the receiver ("УМФОРМЕР") - rotary convertor, and "РАМКА" -- loop.

c) Set accurately the scale calibration of the remote tuning control.

To prevent upsetting calibration, do not unscrew the flexible shaft without need.

d) Check whether the mains cable is connected to the circuit, and whether a voltage of 26 volts is present.

e) Check the operation of the type РПКО-10М radio compass and to - from indicator in all duties: ММ, МН, К, РПК and К-РО as well as ПРД, ПРМ, if the device is intended for conjoint operation with an РСИ aircraft radio station.

Declassified in Part - Sanitized Copy Approved for Release @ 50-Yr 2014/05/14 : CIA-RDP81-01043R004600130010-2

Declassified in Part - Sanitized Copy Approved for Release @ 50-Yr 2014/05/14 : CIA-RDP81-01043R004600130010-2

To complete the installation of the equipment do the following:

1. Fly the aircraft 1-2 km from the range station or aerodrome radio station, keeping its tower within sight.

2. Head the aircraft towards the radio station so that the aircraft centre-line (ship head) should point exactly to the station.

3. Tune the radio compass to the range station and rotating the unfixed loop find the position in which the course indicator pointer reads null.

After that the loop must be fixed in the found position. The accuracy of fixing must be in the order of 2-3 dergrees.

§ 10. Pre-Flight Check

The following must be carried out before flight:

a) Check the reliability of connection between plugs and cables.

b) Check the controls for absence of jamming.

c) Check contact reliability of aerial lead-in and earthing lead with terminals A and 3 (earth).

d) Switch on the device and test it in all duties (K, MM and MH).

e) Check the balance of the device, see whether the course-TF and tuning indicators do not stick, and whether the volume and sensitivity controls operate properly.

f) Check the RC units for secure attachment to the aircraft.

g) Check the scale readings of the remote control for conformity with the position of the variable gang condenser.

Declassified in Part - Sanitized Copy Approved for Release @ 50-Yr 2014/05/14 : CIA-RDP81-01043R004600130010-2

Declassified in Part - Sanitized Copy Approved for Release @ 50-Yr 2014/05/14 : CIA-RDP81-01043R004600130010-2

§ 11. Control During Flight

1. Switching On

a) Before take-off, turn on the tumblers "АККУМУЛЯТОР" (storage battery) and "РАДИО" (radio) on the instrument panel.

b) Set the duty selector on the control panel to МН.

c) Turn the "РЕГУЛЯТОР" (control) handle on the control panel all the way clockwise.

2. Tuning

Check the tuning of the device (carried out previously by a radio engineer on ground) to the range station or beacon, by listening in to call signals. In case the tuning is off and calls for readjustment, the pilot should rotate the remote tuning control of the receiver until the moving scale mark (corresponding to the frequency of the range station or beacon) is lined up with the mark on the fixed scale of the remote control panel.

Carry out a fine tuning of the radio compass. This can be done in one of the following two ways depending on the distance from the aircraft to the range station (i.e., depending upon the field intensity):

a) With the aircraft near the range station (field intensity sufficiently high) fine tuning is effected with the help of the tuning indicator in the following way:

1) Turn the duty selector to К.

2) Slowly rotate the remote control handle to obtain maximum counter-clockwise deflection, of the tuning indicator pointer.

b) With the aircraft far from the range station (low field intensity) fine tuning is carried out, referring

Declassified in Part - Sanitized Copy Approved for Release @ 50-Yr 2014/05/14 : CIA-RDP81-01043R004600130010-2

Declassified in Part - Sanitized Copy Approved for Release @ 50-Yr 2014/05/14 : CIA-RDP81-01043R004600130010-2

aurally to maximum signal volume, in the following way:

1) Turn the duty selector to MH.

2) Slowly rotate the remote control handle to obtain maximum volume of sound.

NOTE:

Occasionally pilots commit a gross error in tuning by simply setting the remote control scale to the frequency of the range station. Correct tuning requires additional trimming, being guided by the tuning indicator or by maximum audibility in the headphones. In fine trimming, the frequency value on the remote control moving scale may differ somewhat (by 5-10 kc.p.s) from the frequency of the range station.

Re-check tuning on the same range station, for which set the selector to MM or MH and receive the call signals of the given range station.

Switching Off

After landing on an aerodrome or landing area the pilot should switch off the radio compass.

§ 12. Use During Flight

Flight to the Range Station

When flying towards the range station do the following:

1. Tune the device to the given radio station.
2. Turn the duty selector to K.
3. Set the RC-TFI tumbler to РПК (RC).
4. Take correct course to the radio station, swinging the plane in the direction opposite to the deflection of the course indicator pointer until the latter shows null.

Declassified in Part - Sanitized Copy Approved for Release @ 50-Yr 2014/05/14 : CIA-RDP81-01043R004600130010-2

Declassified in Part - Sanitized Copy Approved for Release @ 50-Yr 2014/05/14 : CIA-RDP81-01043R004600130010-2

5. Fly the plane by the null position of the course indicator pointer.

In correcting the course apply the aforesaid procedure.

6. When approaching the station (signal strength increasing), reduce, if necessary, the angular sensitivity of the course indicator by rotating the sensitivity control counter--clockwise.

7. From time to time check the call signals aurally in position MH if the latter are non-modulated and in position MM if they are modulated.

Determining the Moment of Flight over Radio Station or Across its Beam

To do this carry out the following manipulations:

1. Turn the control handle "РЕГУЛЯТОР" on the panel all the way right, thereby increasing accuracy of indication.

2. Turn the duty selector to K.

3. Set the RC-TFI tumbler to PO (TFI).

The signal lamp must flash on.

4. Locate the radio station and determine the moment of flight over it by the following rule:

a) The radio station lies ahead if the indicator pointer points to the miniature aircraft heading towards the centre of the scale (left).

b) The plane passes the radio station when the pointer swings over from left to right. The swing-over takes 3-4 seconds.

The indication error varies from 100 to 300 m.

Occasionally, double swing-over is observed. In this case passing is indicated by the second swing-over.

The same rules apply in passing across the radio sta-

Declassified in Part - Sanitized Copy Approved for Release @ 50-Yr 2014/05/14 : CIA-RDP81-01043R004600130010-2

Declassified in Part - Sanitized Copy Approved for Release @ 50-Yr 2014/05/14 : CIA-RDP81-01043R004600130010-2

tion beam.

The TFI may be used to locate radio stations only at distances of 50-60 km for radio stations ПАР-3, ПАР and ЗАП and 20-30 km for МПАР.

At greater distances from the radio station, noise may prevent the needle from deflecting distinctly to any definite side.

APPROACH TO INSTRUMENT LANDING
(Change-Over to Landing Run)

1. Aerodrome Conditions

An approach to instrument landing by the radio compass and TF indicator type РПКО-10М requires an aerodrome size of 2 x 2 km with open approaches.

The height of obstacles located at 2-3 km from the aerodrome boundary should not exceed 30-40 m. The range station is installed at a distance of 1.5 km from the landing runway in the direction of approach and in such a way that an aircraft on a landing glide, at a height of approximately 100 m after cutting the throttle, could land and taxi within the aerodrome operation area.

2. Procedure

If a pl[illegible] to land during bad weather in the vicinity of the aerodrome ([illegible], clouds at 50-100 m), the earth being visible from an alt[illegible]ude of at least 50 m, the follo[illegible] procedure is recommended for using the RC-TFI, type P[illegible].

a) Approaching the radio station [illegible] acc[illegible] by the usual procedure described in §12.

The distance to the radio station is periodically checked by switching over from RC [illegible] TFI.

The moment of passing [illegible] determined by the RC and TFI

Declassified in Part - Sanitized Copy Approved for Release @ 50-Yr 2014/05/14 : CIA-RDP81-01043R004600130010-2

Declassified in Part - Sanitized Copy Approved for Release @ 50-Yr 2014/05/14 : CIA-RDP81-01043R004600130010-2

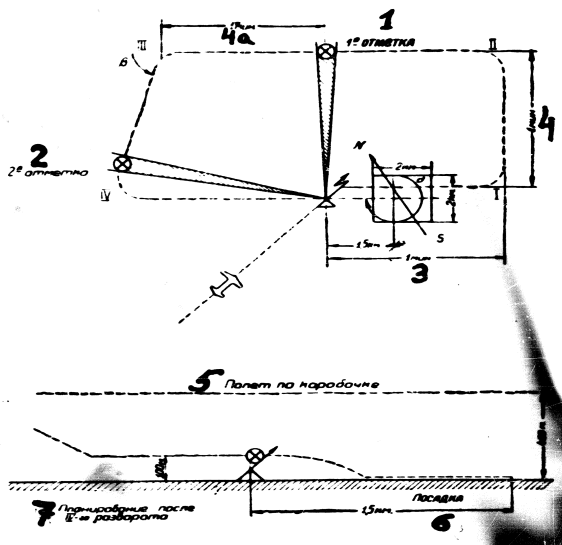

Fig.5

1 - First passing indication; 2 - Second passing indication; 3 - [illegible] 4 - One minute; 4a) - One minute; 5 - Supplementary approach; 6 - Landing; 7 - Glide after fourth turn; Symbols: α - Landing course angle; I,II,III,IV - Turning points; β - III turning angle = 80°; $\otimes$ - Radio station cross beam record; ↗ - Homing radio station.

If the tumbler is at PПК (RC) when the radio station is passed, the pointer swings sharply to the right or left of zero and in most cases returns to zero when the radio station is behind. If the tumbler is at PO (TFI) at this moment, the pointer swings over from its extreme left to its extreme right position on the scale.

Declassified in Part - Sanitized Copy Approved for Release @ 50-Yr 2014/05/14 : CIA-RDP81-01043R004600130010-2